A11DHJA1 | Released by HIWIN design group.

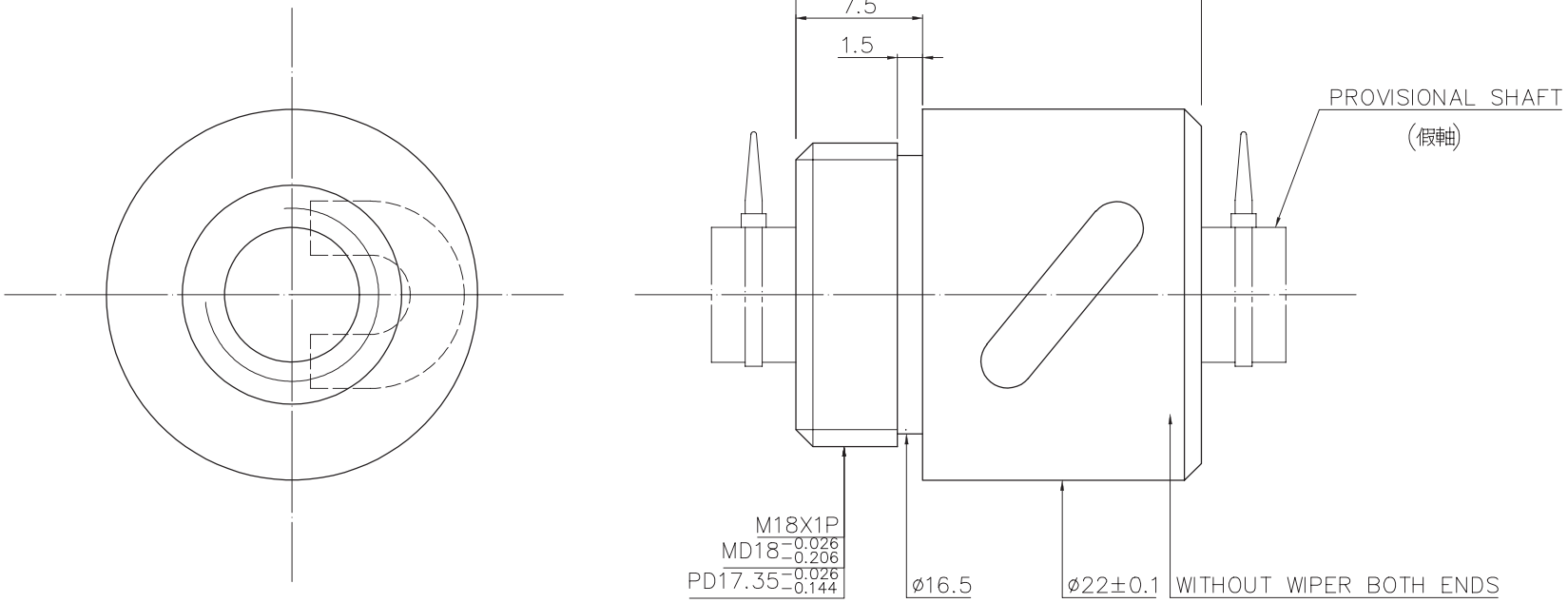

SPEC: R8-2.5B1-RSB

MAX. AXIAL LOAD (kgf)		LUBRICATION		PRELOAD (kgf)	~
MAX. ROTATIONAL SPEED (rpm)		SPACE BALL		R.D.	6.136
DN VALUE		E1 TYPE ASSEMBLY METHOD		S.F. (kgf)	~
MAX. FEED RATE (m/min)		CUSTOMER DRAWING NO.		DRAG TORQUE (kgf-cm)	~
ACCELERATION (m/sec²)		CUSTOMER MC TYPE		DIRECTION OF TURN	R
SUPPORT METHOD		CUSTOMER AXIAL TYPE		P.C. DIA.	8.2
				BALL DIA.	2
				BACKLASH	0.02MAX
				CIRCUIT	2.5*1
				LEAD ANGLE	5.54
				DYNAMIC (kgf)	218
				STATIC (kgf)	317
				LEAD	2.5

THREAD LENGTH

UNCHAMFERED USE ■RO.5 □R1 □R

ROUGH M/C	FIN M/C	GRD	SCALE
25a	6.3a	0.4a	1:X

NORMAL TOLERANCE mm

UP TO 6	6 30	30 120	120 300	300 600	600 1200	1200 2400	OVER 2400
±0.1	±0.2	±0.3	±0.4	±0.5	±0.8	±1.0	±1.5

V_{300p}: ~

ep: ~

*BREAK SHARP EDGE UNLESS OTHER SPECIFIED.
*未畫倒角者以R0.5MAX

THREAD END ALLOWS ABOVE LENGTH OUT OF HARDNESS TOLERANCE

MAT.	SH: ROLLED	DATE	2008.11.11
	NT: SNCM220/Equivalent	DWG	Chunlin
THREAD BALL TRACK HRC 56 ~ 62		APPD	Michelle
		PROCESS NO.	G
CUSTR	LETROMEC(M)		
DWG.NO.	A11DHJA1		

HIWIN® BALLSCREWS

DATE	MODIFICATION	APPROVED

* PLEASE IGNORE CHINESE CHARACTERS WHICH ARE FOR OUR REFERENCE ONLY.

A11DHKA1 | Released by HIWIN design group.

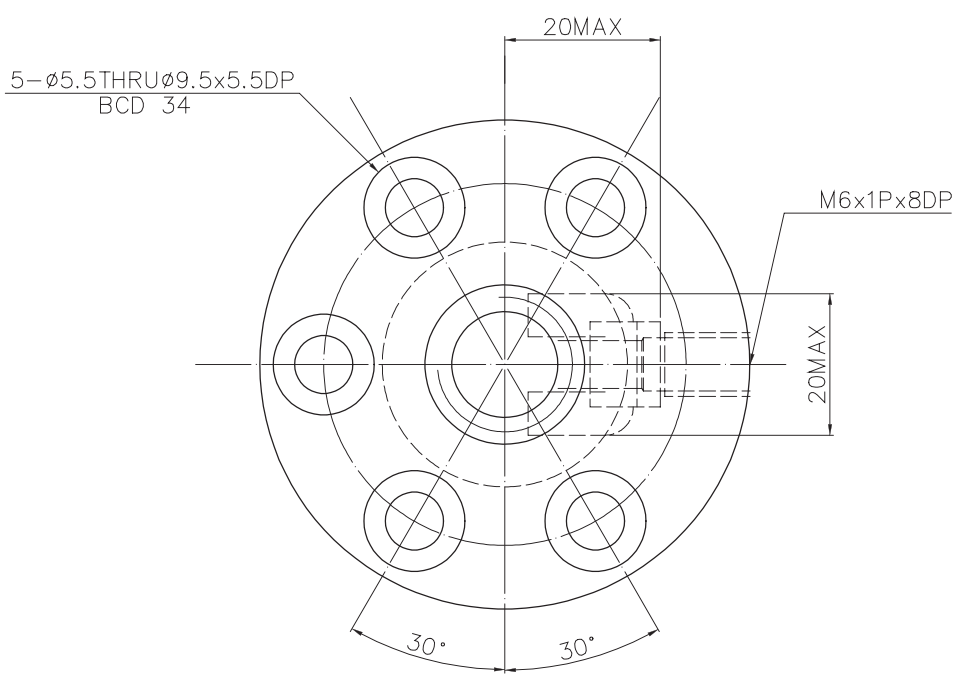

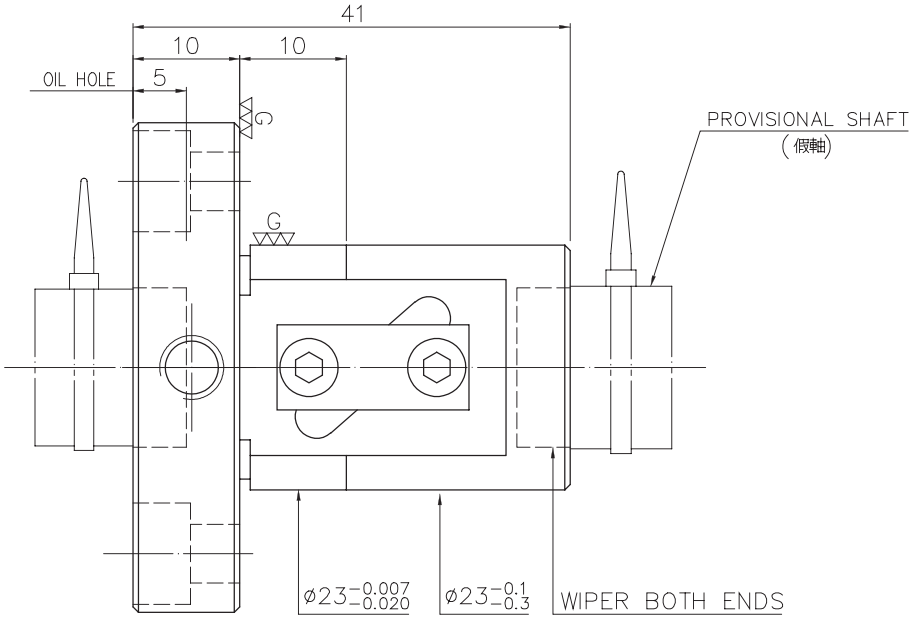

SPEC: R10−4B1−FSV

MAX. AXIAL LOAD (kgf)		LUBRICATION		PRELOAD (kgf)	−
MAX. ROTATIONAL SPEED (rpm)		SPACE BALL		R.D.	−
DN VALUE		E1 TYPE ASSEMBLY METHOD		S.F. (kgf)	
MAX. FEED RATE (m/min)		CUSTOMER DRAWING NO.		DRAG TORQUE (kgf-cm)	
ACCELERATION (m/sec²)		CUSTOMER MC TYPE		DIRECTION OF TURN	R
SUPPORT METHOD		CUSTOMER AXIAL TYPE		P.C. DIA.	10.2
				BALL DIA.	2.381
				BACKLASH	0.02MAX
				CIRCUIT	2.5*1
				LEAD ANGLE	7.12
				DYNAMIC (kgf)	304
				STATIC (kgf)	466
				LEAD	4

THREAD LENGTH

UNCHAMFERED USE ■R0.5 □R1 □R

ROUGH M/C	FIN M/C	GRD	SCALE
25a	6.3a	0.4a	1:X

NORMAL TOLERANCE mm

UP TO 6	6 30	30 120	120 300	300 600	600 1200	1200 2400	OVER 2400
±0.1	±0.2	±0.3	±0.4	±0.5	±0.8	±1.0	±1.5

V_{300p}: ~

ep: ~

HIWIN® BALLSCREWS

MAT.	SH: ROLLED	DATE	2008.11.11
	NT: SNCM220/Equivalent	DWG	Chunlin
THREAD BALL TRACK HRC 56 ~ 62		APPD	Michelle
		PROCESS NO.	G
CUSTR	LETROMEC(M)		
DWG.NO.	A11DHKA1		

*BREAK SHARP EDGE UNLESS OTHER SPECIFIED.
*未畫倒角者以R0.5MAX

◐ THREAD END ALLOWS ABOVE LENGTH OUT OF HARDNESS TOLERANCE

DATE	MODIFICATION	APPROVED

* PLEASE IGNORE CHINESE CHARACTERS WHICH ARE FOR OUR REFERENCE ONLY.

A11THWA1 | Released by HIWIN design group.

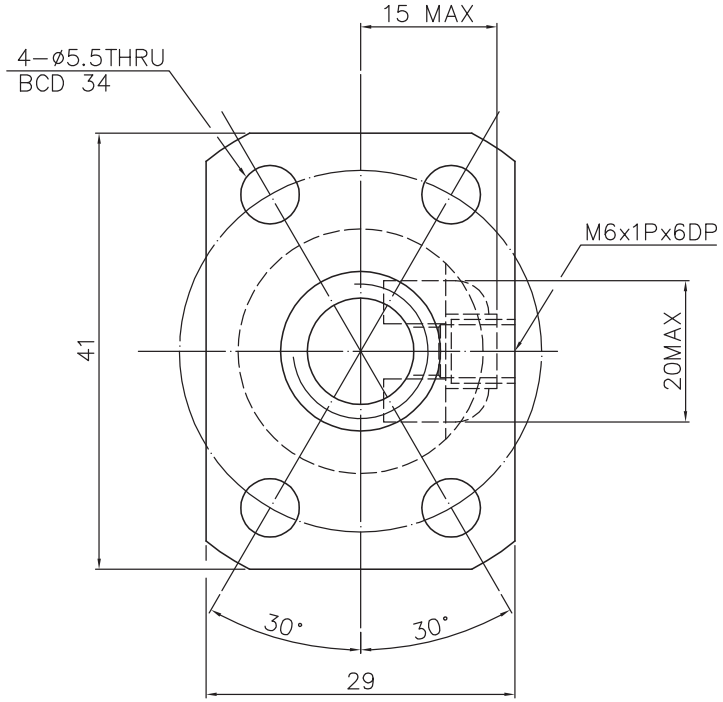

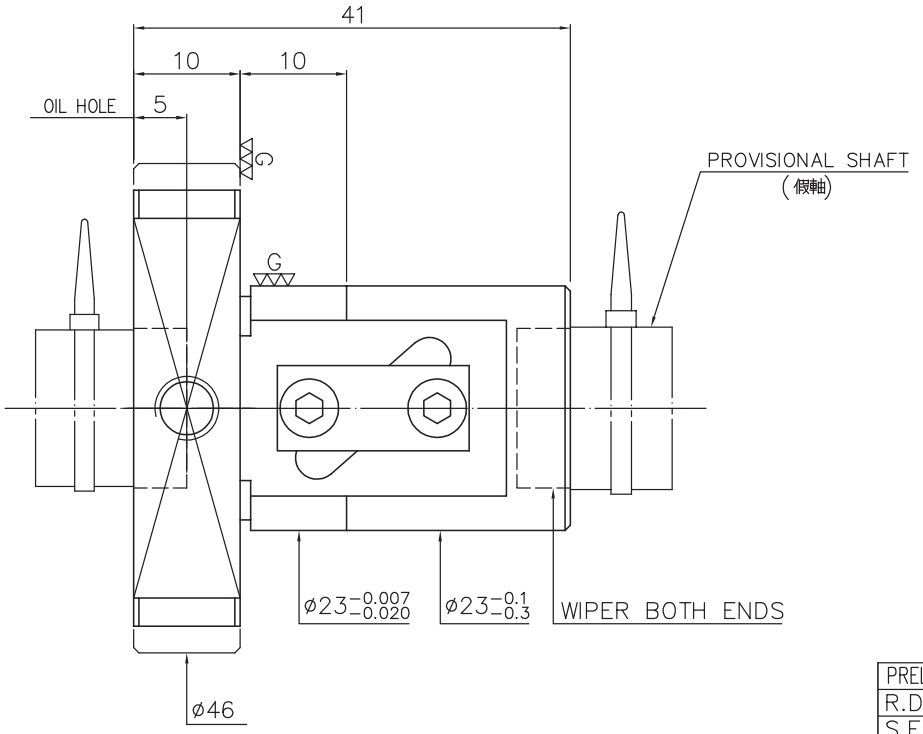

SPEC: R10−4B1−FSV

MAX. AXIAL LOAD (kgf)		LUBRICATION		BALL DIA.	2.381
MAX. ROTATIONAL SPEED (rpm)		SPACE BALL		BACKLASH	0.02MAX
DN VALUE		E1 TYPE ASSEMBLY METHOD		CIRCUIT	2.5*1
MAX. FEED RATE (m/min)		CUSTOMER DRAWING NO.		LEAD ANGLE	7.12
ACCELERATION (m/sec²)		CUSTOMER MC TYPE		DYNAMIC (kgf)	304
SUPPORT METHOD		CUSTOMER AXIAL TYPE		STATIC (kgf)	466
				LEAD	4

PRELOAD (kgf)	—
R.D.	—
S.F. (kgf)	~
DRAG TORQUE (kgf-cm)	~
DIRECTION OF TURN	R
P.C. DIA.	10.2

THREAD LENGTH

UNCHAMFERED USE ■C0.5 □C1 □C

ROUGH M/C	FIN M/C	GRD
25a	6.3a	0.4a

SCALE 1:X

NORMAL TOLERANCE mm

UP TO 6	6 30	30 120	120 300	300 600	600 1200	1200 2400	OVER 2400
±0.1	±0.2	±0.3	±0.4	±0.5	±0.8	±1.0	±1.5

V300p: ~

ep: ~

HIWIN® BALLSCREWS

MAT.	SH: ROLLED
	NT: SNCM220/Equivalent
THREAD BALL TRACK	HRC 56 ~ 62
DATE	2010.08.30
DWG	Joy
APPD	Lady
PROCESS NO.	G
CUSTR	LETROMEC(M)
DWG.NO.	A11THWA1

*BREAK SHARP EDGE UNLESS OTHER SPECIFIED.
*未畫倒角者去毛邊 (C0.2MAX)

THREAD END ALLOWS ABOVE LENGTH OUT OF HARDNESS TOLERANCE

DATE	MODIFICATION	APPROVED

* PLEASE IGNORE CHINESE CHARACTERS WHICH ARE FOR OUR REFERENCE ONLY.

A10XFCA1 | Released by HIWIN design group.

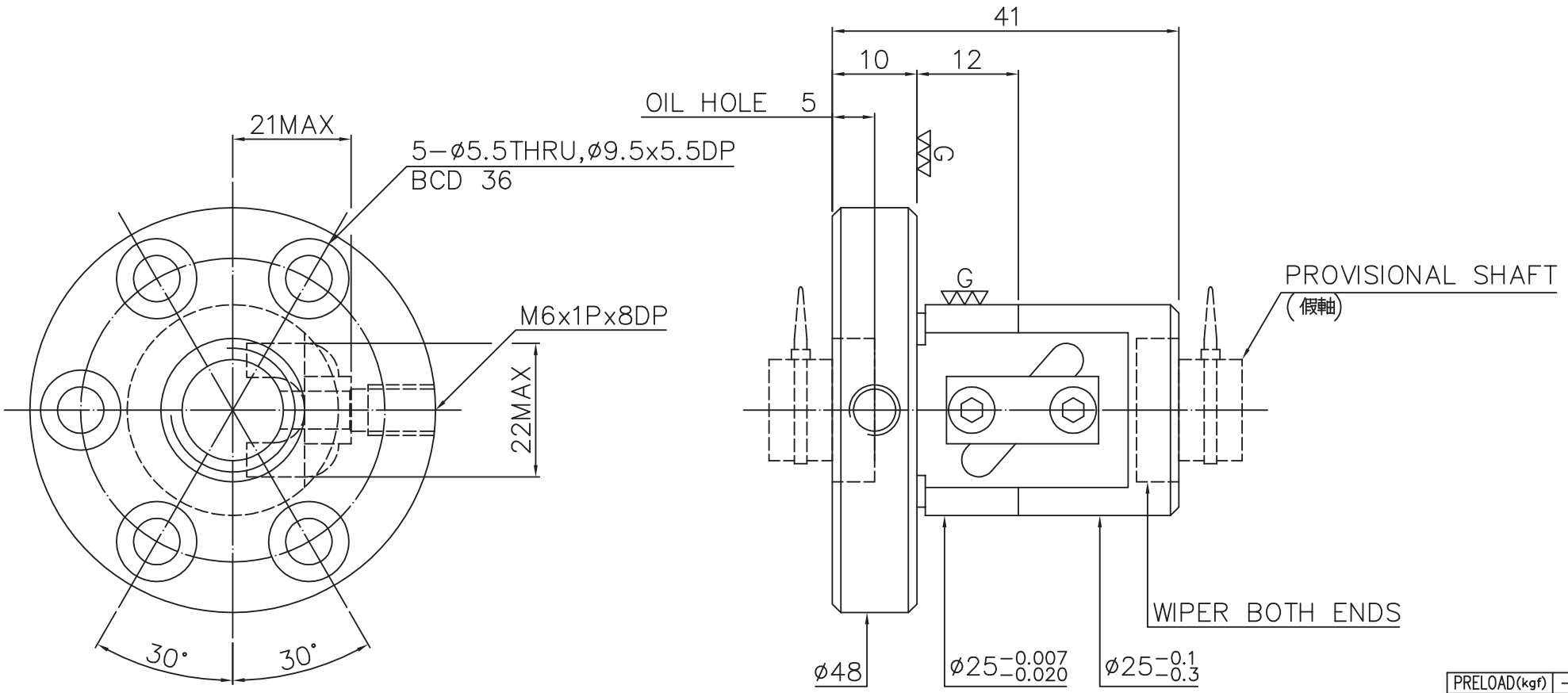

SPEC: R12−4B1−FSV

MAX. AXIAL LOAD (kgf)		LUBRCATION		PRELOAD (kgf)	----
MAX. ROTATIONAL SPEED (rpm)		SPACE BALL		R.D	----
DN VALUE		E1 TYPE ASSEMBLY METHOD		S.F (kgf)	----
MAX. FEED RATE (m/min)		CUSTOMER DRAWING NO.		DRAG TORQUE (kgf-cm)	----
ACCELERATION (m/sec²)		CUSTOMER MC TYPE		DIRECTION OF TURN	R
SUPPORT METHOD		CUSTOMER AXIAL TYPE		PC DIA.	12.25
				BALL DIA.	2.381
				BACKLASH	----
				CIRCUIT	2.5*1
				LEAD ANGLE	5.93°
				DYNAMIC (kgf)	----
				STATIC (kgf)	----
				LEAD	4

THREAD LENGTH

E300: ----

UNCHAMFERED USE □R0.5 ■R1 □R

ROUGH M/C	FIN M/C	GRD	SCALE
25a	6.3a	0.4a	1:X

UNTOL DIMN mm

UP TO 6	6 30	30 120	120 300	300 600	600 1200	1200 2400	OVER 2400
±0.1	±0.2	±0.3	±0.4	±0.5	±0.8	±1.0	±1.5

MATAL	SH: ROLLED	DATE	2005.12.21
	NT: SNCM220	DWG	鄒健偉
THREAD BALL TRACK HRC 56 ~ 62		APPD	吳秋燕
		PROCESS NO.	G
CUSTR	HIWIN STD.		
DWG.NO.	A10XFCA1		

HIWIN® BALLSCREWS

*BREAK SHARP EDGE UNLESS OTHER SPECIFIED.
*未畫倒角者以R0.5MAX

THREAD END ALLOWS ABOVE LENGTH OUT OF HARDNESS TOLERANCE

DATE	MODIFICATION	APPROVED

* PLEASE IGNORE CHINESE CHARACTERS WHICH ARE FOR OUR REFERENCE ONLY.

A-151

A11MEVA1 | Released by HIWIN design group.

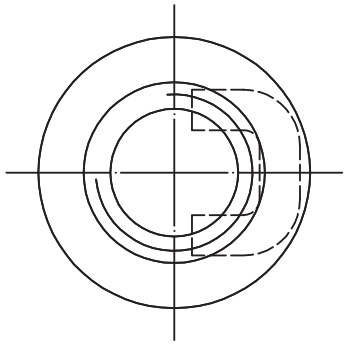

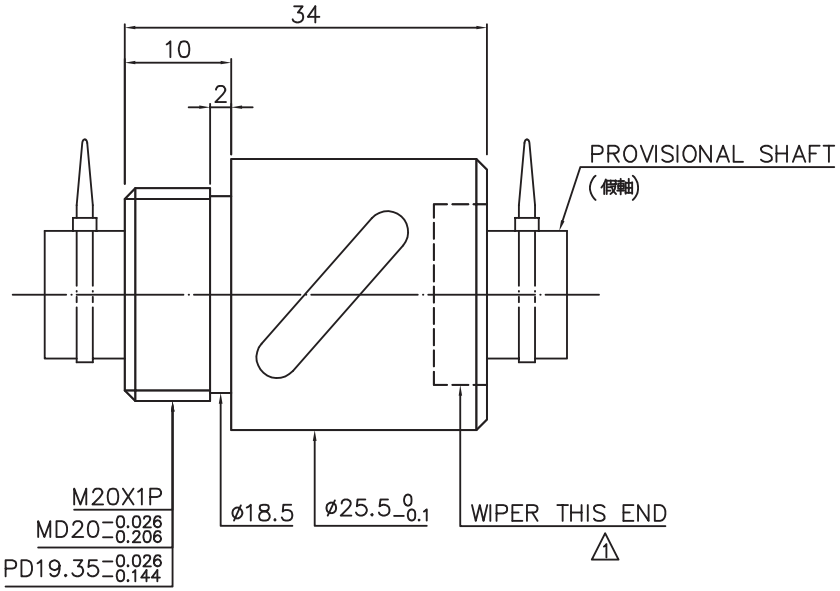

SPEC: R12-4B1-RSB

MAX. AXIAL LOAD (kgf)		LUBRICATION		BALL DIA.	2.381
MAX. ROTATIONAL SPEED (rpm)		SPACE BALL		BACKLASH	0.02MAX
DN VALUE		E1 TYPE ASSEMBLY METHOD		CIRCUIT	2.5*1
MAX. FEED RATE (m/min)		CUSTOMER DRAWING NO.		LEAD ANGLE	5.93
ACCELERATION (m/sec²)		CUSTOMER MC TYPE		DYNAMIC (kgf)	344
SUPPORT METHOD		CUSTOMER AXIAL TYPE		STATIC (kgf)	574
				LEAD	4

PRELOAD(kgf)	~
R.D.	~
S.F. (kgf)	~
DRAG TORQUE(kgf-cm)	~
DIRECTION OF TURN	R
P.C. DIA.	12.25

THREAD LENGTH

V_{300p}: ~

ep: ~

UNCHAMFERED USE □R0.5 ■R1 □R

ROUGH M/C 25a | FIN M/C 6.3a | GRD 0.4a

SCALE 1:X

NORMAL TOLERANCE mm

UP TO 6	6 30	30 120	120 300	300 600	600 1200	1200 2400	OVER 2400
±0.1	±0.2	±0.3	±0.4	±0.5	±0.8	±1.0	±1.5

MAT. SH: ROLLED | NT: SNCM220/Equivalent

THREAD BALL TRACK HRC 56 ~ 62

DATE	2009.12.29
DWG	Penny
APPD	Cody
PROCESS NO.	G
CUSTR	LETROMEC(M)
DWG.NO.	A11MEVA1

HIWIN® BALLSCREWS

*BREAK SHARP EDGE UNLESS OTHER SPECIFIED.
*未畫倒角者以R0.5MAX

THREAD END ALLOWS ABOVE LENGTH OUT OF HARDNESS TOLERANCE

DATE	MODIFICATION	APPROVED
2009.12.29	MOD.1	Cody

* PLEASE IGNORE CHINESE CHARACTERS WHICH ARE FOR OUR REFERENCE ONLY.

A-152

A10UXQA1 | Released by HIWIN design group.

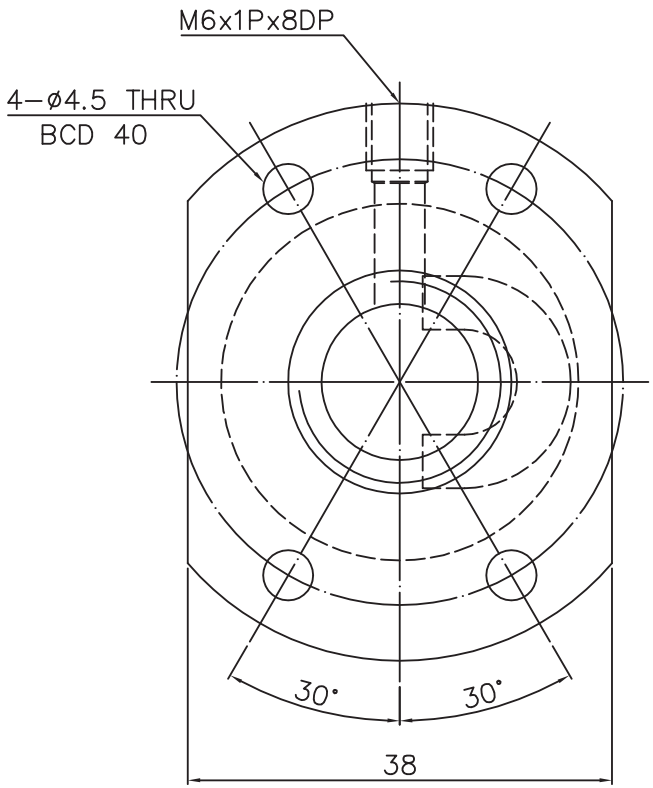

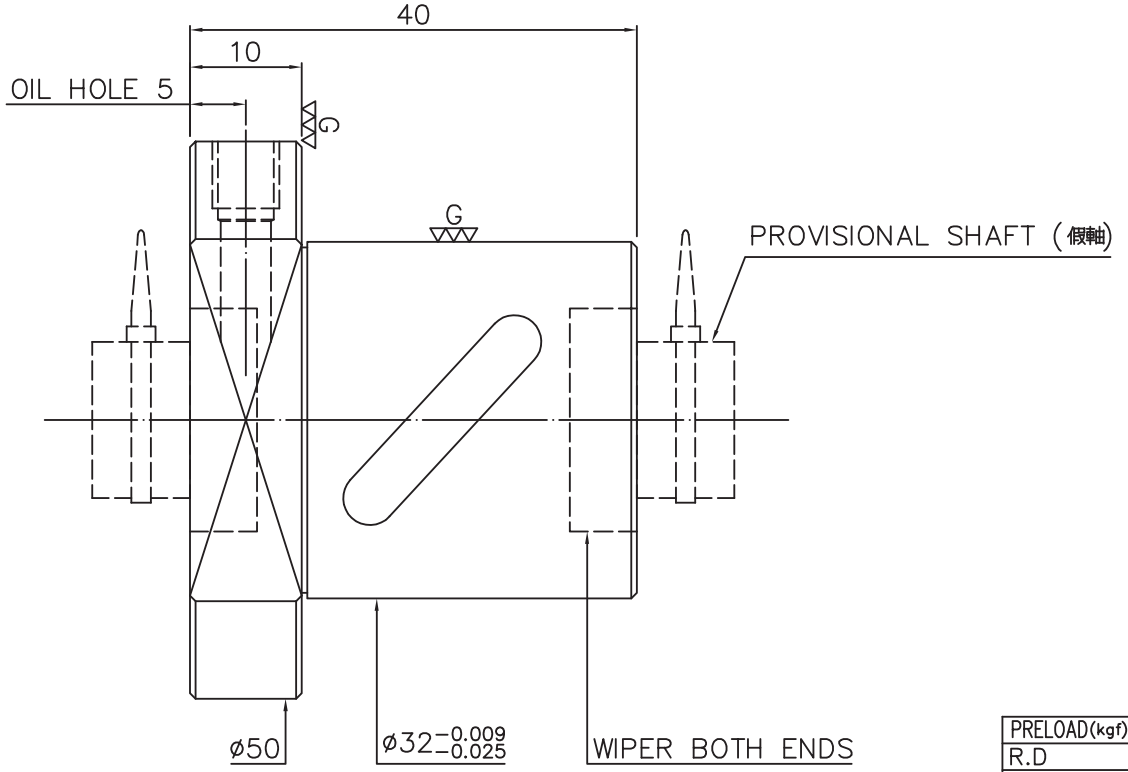

SPEC: R14−5B1−FSB

MAX. AXIAL LOAD (kgf)		LUBRCATION		BALL DIA.	3.175
MAX. ROTATIONAL SPEED (rpm)		SPACE BALL		BACKLASH	~
DN VALUE		E1 TYPE ASSEMBLY METHOD		CIRCUIT	2.5*1
MAX. FEED RATE (m/min)		CUSTOMER DRAWING NO.		LEAD ANGLE	6.14
ACCELERATION (m/sec²)		CUSTOMER MC TYPE		DYNAMIC (kgf)	~
SUPPORT METHOD		CUSTOMER AXIAL TYPE		STATIC (kgf)	~
				LEAD	5

PRELOAD (kgf)	—
R.D	~
S.F (kgf)	———
DRAG TORQUE (kgf-cm)	———
DIRECTION OF TURN	R
PC DIA.	14.8

THREAD LENGTH

E300: ~

UNCHAMFERED USE ■R0.5 □R1 □R

ROUGH M/C	FIN M/C	GRD	SCALE
25a	6.3a	0.4a	1: X

UNTOL DIMN mm

UP TO 6	6 30	30 120	120 300	300 600	600 1200	1200 2400	OVER 2400
±0.1	±0.2	±0.3	±0.4	±0.5	±0.8	±1.0	±1.5

MATAL	SH: ROLLED	DATE	01.31.'05
	NT: SNCM220	DWG	吳秋燕
THREAD BALL TRACK HRC 56 ~ 62		APPD	楊創堡
		PROCESS NO.	G
CUSTR	HIWIN		
DWG.NO.	A10UXQA1		

HIWIN® BALLSCREWS

*BREAK SHARP EDGE UNLESS OTHER SPECIFIED.
*未倒角者以R0.5MAX

THREAD END ALLOWS ABOVE LENGTH OUT OF HARDNESS TOLERANCE

DATE	MODIFICATION	APPROVED

* PLEASE IGNORE CHINESE CHARACTERS WHICH ARE FOR OUR REFERENCE ONLY.

A-153

A11DHWA1 | Released by HIWIN design group.

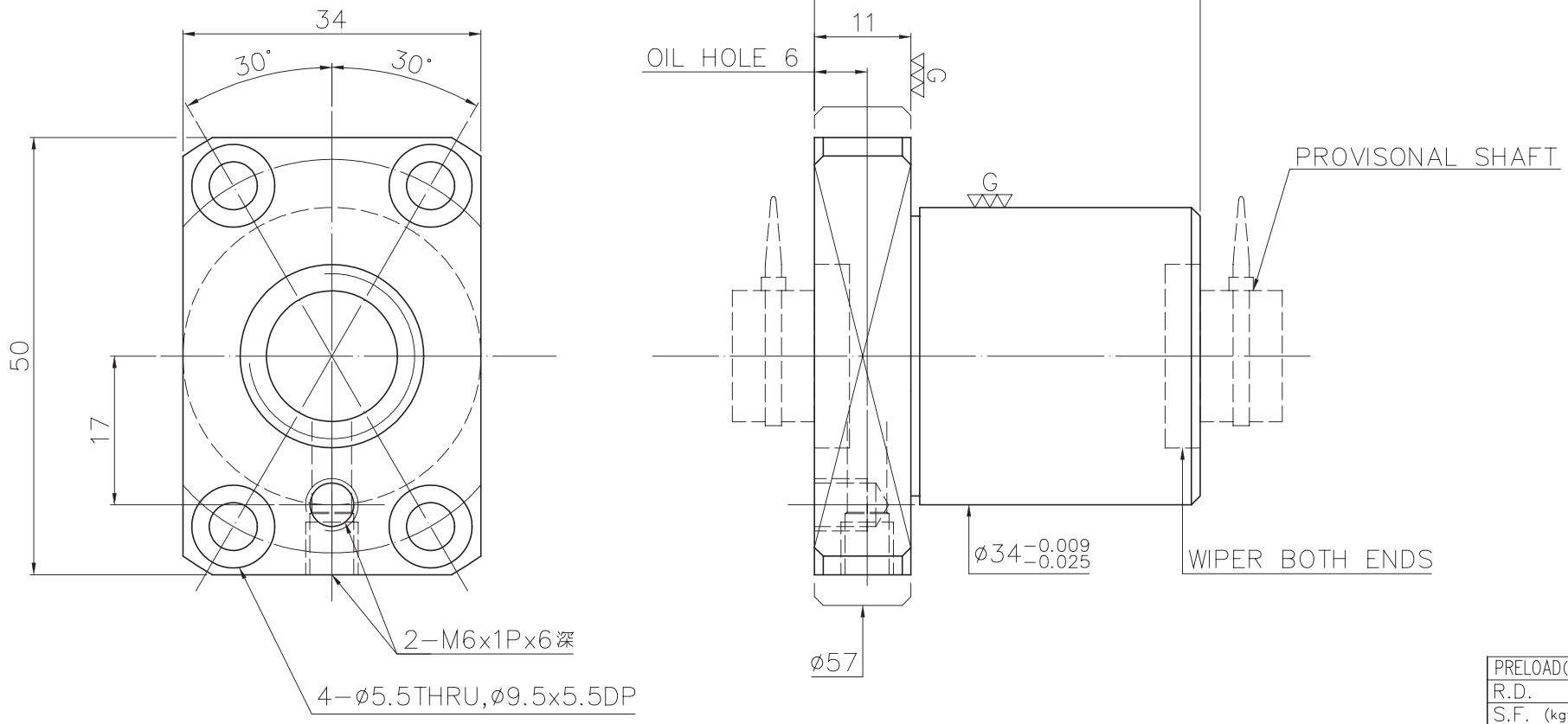

SPEC: 2R15−10K3−FSC

MAX. AXIAL LOAD (kgf)		LUBRICATION		PRELOAD (kgf)	—
MAX. ROTATIONAL SPEED (rpm)		SPACE BALL		R.D.	—
DN VALUE		E1 TYPE ASSEMBLY METHOD		S.F. (kgf)	———
MAX. FEED RATE (m/min)		CUSTOMER DRAWING NO.		DRAG TORQUE (kgf-cm)	———
ACCELERATION (m/sec²)		CUSTOMER MC TYPE		DIRECTION OF TURN	R
SUPPORT METHOD		CUSTOMER AXIAL TYPE		P.C. DIA.	15.64
				BALL DIA.	3.175
				BACKLASH	0.04MAX
				CIRCUIT	3
				LEAD ANGLE	11.5
				DYNAMIC (kgf)	860
				STATIC (kgf)	1746
				LEAD	10

THREAD LENGTH

UNCHAMFERED USE ■RO.5 □R1 □R

ROUGH M/C	FIN M/C	GRD
25a	6.3a	0.4a

SCALE 1: X

NORMAL TOLERANCE mm

UP TO 6	6 30	30 120	120 300	300 600	600 1200	1200 2400	OVER 2400
±0.1	±0.2	±0.3	±0.4	±0.5	±0.8	±1.0	±1.5

MAT.	SH: ROLLED
	NT: SNCM220/Equivalent
THREAD BALL TRACK	HRC 56 ~ 62
DATE	2008.11.11
DWG	WCWU
APPD	Michelle
PROCESS NO.	G
CUSTR	LETROMEC(M)
DWG.NO.	A11DHWA1

HIWIN® BALLSCREWS

*BREAK SHARP EDGE UNLESS OTHER SPECIFIED.
*未畫倒角者以R0.5MAX

THREAD END ALLOWS ABOVE LENGTH OUT OF HARDNESS TOLERANCE

V300p: —

ep: ~

DATE	MODIFICATION	APPROVED

* PLEASE IGNORE CHINESE CHARACTERS WHICH ARE FOR OUR REFERENCE ONLY.

A-154

A11DUQA2 | Released by HIWIN design group.

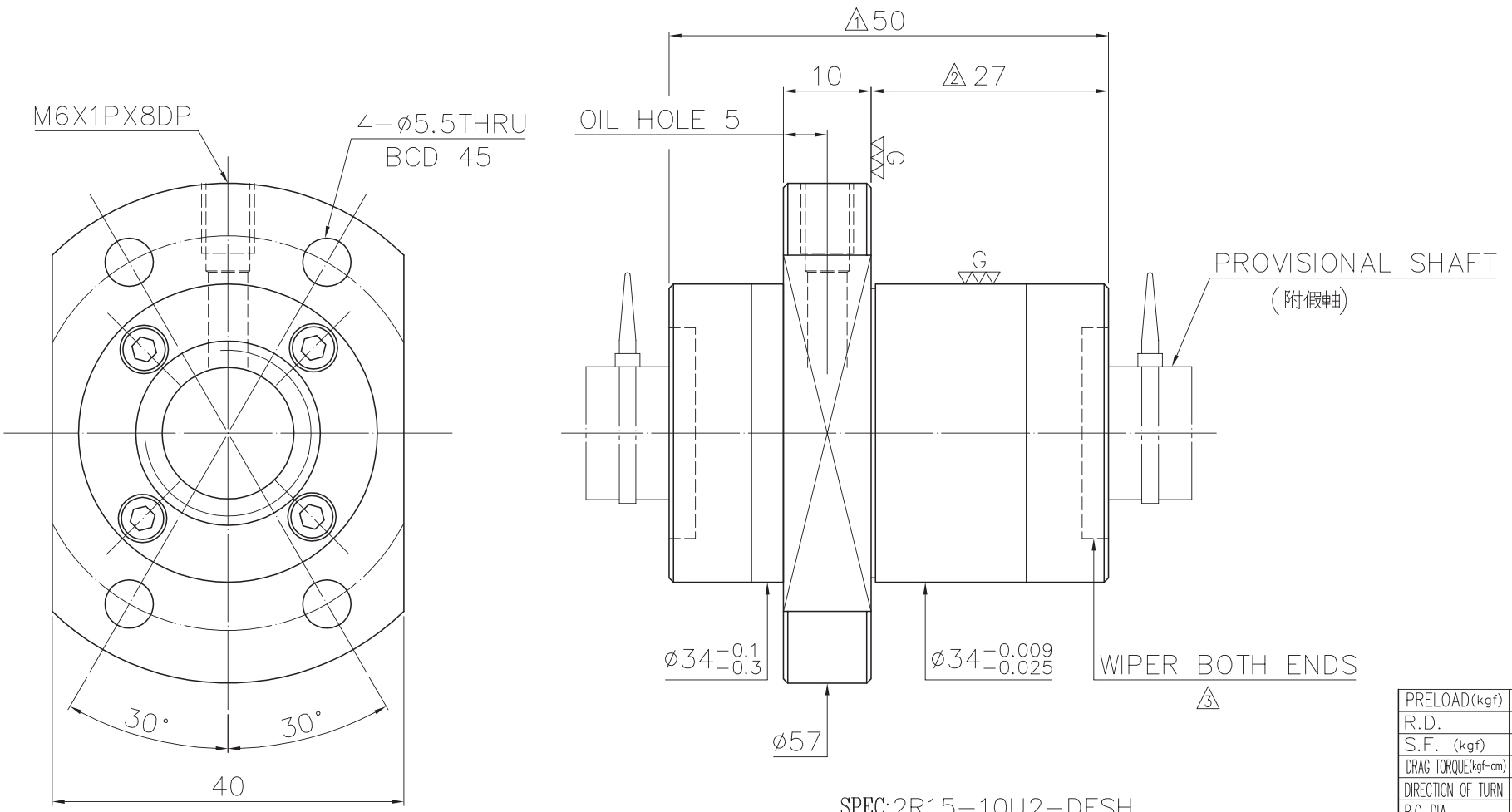

SPEC: 2R15−10U2−DFSH

MAX. AXIAL LOAD (kgf)		LUBRICATION		BALL DIA.	3.175
MAX. ROTATIONAL SPEED (rpm)		SPACE BALL		BACKLASH	0.04MAX
DN VALUE		E1 TYPE ASSEMBLY METHOD		CIRCUIT	2.8*2
MAX. FEED RATE (m/min)		CUSTOMER DRAWING NO.		LEAD ANGLE	11.5
ACCELERATION (m/sec²)		CUSTOMER MC TYPE		DYNAMIC (kgf)	1009
SUPPORT METHOD		CUSTOMER AXIAL TYPE		STATIC (kgf)	2039
				LEAD /PITCH	10/5

PRELOAD (kgf)	~
R.D.	~
S.F. (kgf)	~
DRAG TORQUE (kgf-cm)	~
DIRECTION OF TURN	R
P.C. DIA.	15.64

THREAD LENGTH

V_{300p}: ~

ep: ~

UNCHAMFERED USE □C0.5 ■C1 □C

ROUGH M/C	FIN M/C	GRD
25a	6.3a	0.4a

SCALE 1: X

NORMAL TOLERANCE mm

UP TO 6	6 30	30 120	120 300	300 600	600 1200	1200 2400	OVER 2400
±0.1	±0.2	±0.3	±0.4	±0.5	±0.8	±1.0	±1.5

HIWIN® BALLSCREWS

MAT.	SH: ROLLED	DATE	2011.03.28
	NT: SNCM220/Equivalent	DWG	Akuan
THREAD BALL TRACK HRC 56 ~ 62		CHK	Sting
		APPD	Cody
CUSTR	△4 LETROMEC(M)		
DWG.NO.	A11DUQA2		

*BREAK SHARP EDGE UNLESS OTHER SPECIFIED.
*未畫倒角者去毛邊 (C0.2MAX)

THREAD END ALLOWS ABOVE LENGTH OUT OF HARDNESS TOLERANCE

DATE	MODIFICATION	APPROVED
2011.04.14	MOD. △4	Cody
2011.03.28	MOD. △1 ~ △3	Cody

* PLEASE IGNORE CHINESE CHARACTERS WHICH ARE FOR OUR REFERENCE ONLY.

A-155

A11DHXA1 | Released by HIWIN design group.

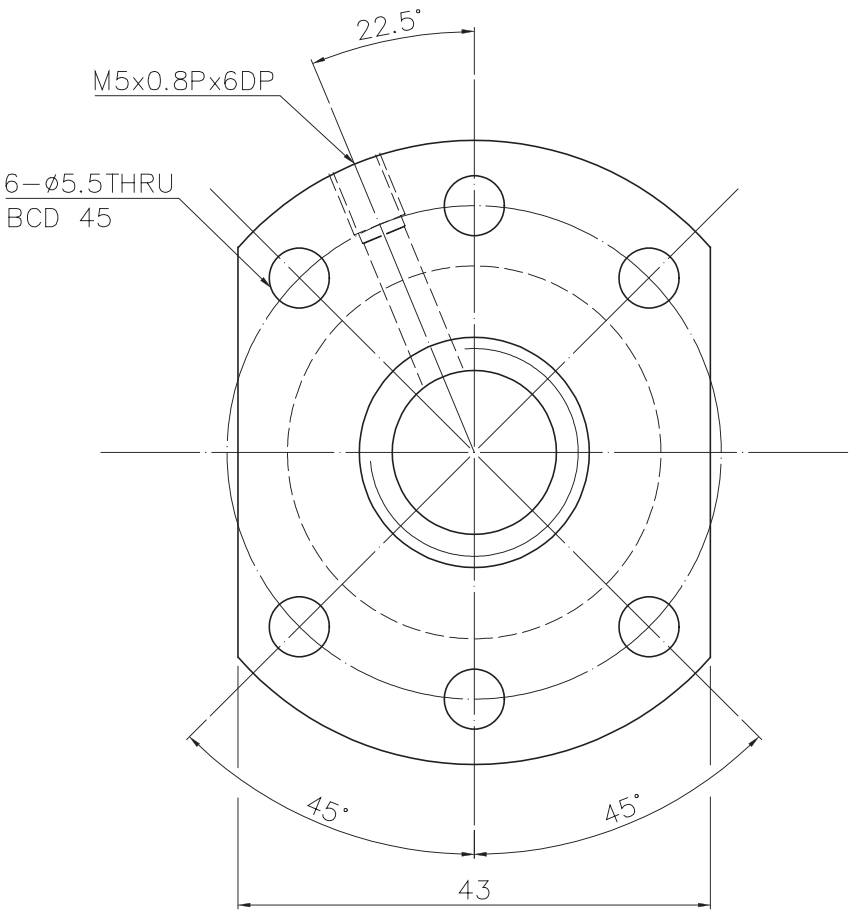

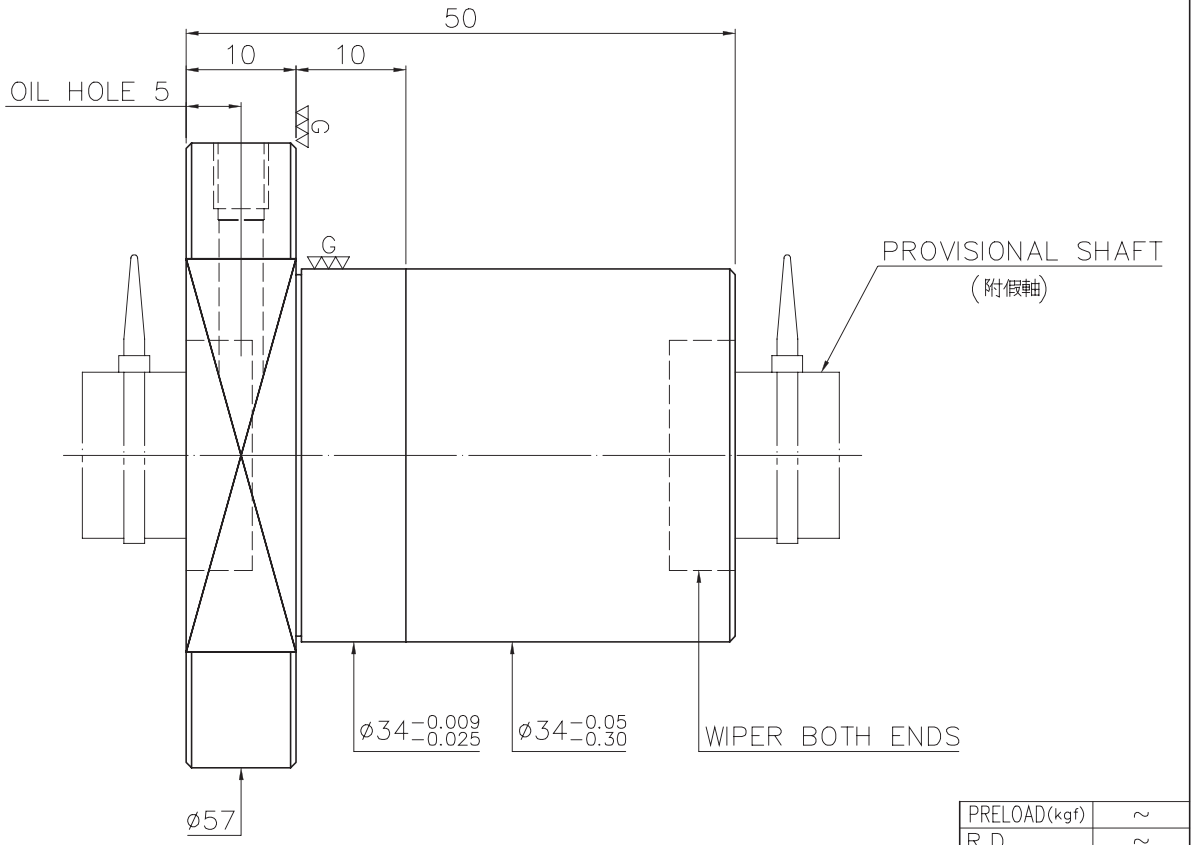

SPEC: 4R15-20K2-FSC

MAX. AXIAL LOAD (kgf)		LUBRICATION		PRELOAD (kgf)	~
MAX. ROTATIONAL SPEED (rpm)		SPACE BALL		R.D.	~
DN VALUE		E1 TYPE ASSEMBLY METHOD		S.F. (kgf)	~
MAX. FEED RATE (m/min)		CUSTOMER DRAWING NO.		DRAG TORQUE (kgf-cm)	~
ACCELERATION (m/sec²)		CUSTOMER MC TYPE		DIRECTION OF TURN	R
SUPPORT METHOD		CUSTOMER AXIAL TYPE		P.C. DIA.	15.675
				BALL DIA.	3.175
				BACKLASH	0.04MAX
				CIRCUIT	2
				LEAD ANGLE	22.1
				DYNAMIC (kgf)	570
				STATIC (kgf)	1132
				LEAD	20

THREAD LENGTH

V_{300p}: ~

ep: ~

UNCHAMFERED USE ☐R0.5 ■R1 ☐R

ROUGH M/C	FIN M/C	GRD	SCALE
25a	6.3a	0.4a	1:X

NORMAL TOLERANCE mm

UP TO 6	6 30	30 120	120 300	300 600	600 1200	1200 2400	OVER 2400
±0.1	±0.2	±0.3	±0.4	±0.5	±0.8	±1.0	±1.5

HIWIN® BALLSCREWS

MAT.	SH: ROLLED	DATE	2008.11.11
	NT: SNCM220/Equivalent	DWG	WCWU
THREAD BALL TRACK HRC 56 ~ 62		APPD	Michelle
		PROCESS NO.	G
CUSTR	LETROMEC(M)		
DWG.NO.	A11DHXA1		

*BREAK SHARP EDGE UNLESS OTHER SPECIFIED.
*未畫倒角者以R0.5MAX

THREAD END ALLOWS ABOVE LENGTH OUT OF HARDNESS TOLERANCE

DATE	MODIFICATION	APPROVED

* PLEASE IGNORE CHINESE CHARACTERS WHICH ARE FOR OUR REFERENCE ONLY.

A11DUPA1 | Released by HIWIN design group.

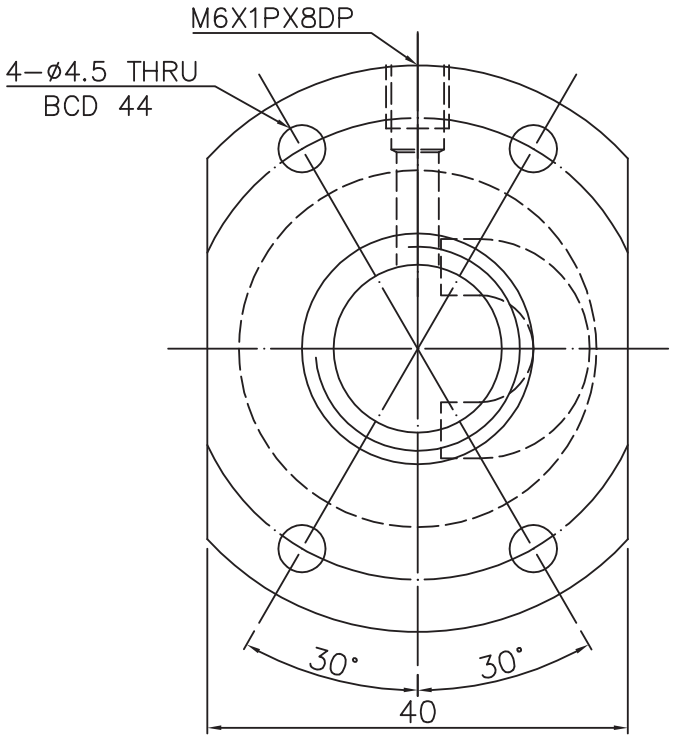

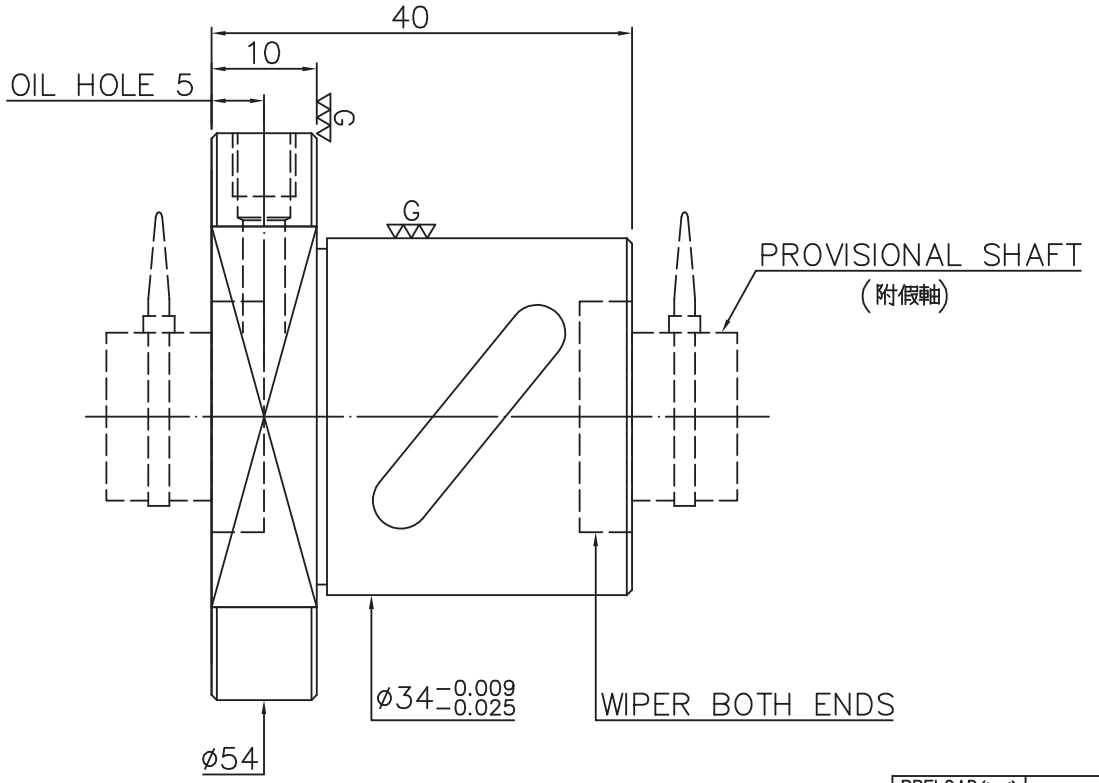

SPEC: R16−5B1−FSB

MAX. AXIAL LOAD (kgf)		LUBRICATION		BALL DIA.	3.175
MAX. ROTATIONAL SPEED (rpm)		SPACE BALL		BACKLASH	0.04MAX
DN VALUE		E1 TYPE ASSEMBLY METHOD		CIRCUIT	2.5*1
MAX. FEED RATE (m/min)		CUSTOMER DRAWING NO.		LEAD ANGLE	5.62
ACCELERATION (m/sec²)		CUSTOMER MC TYPE		DYNAMIC (kgf)	679
SUPPORT METHOD		CUSTOMER AXIAL TYPE		STATIC (kgf)	1226
				LEAD	5

PRELOAD (kgf)	~
R.D.	~
S.F. (kgf)	
DRAG TORQUE (kgf-cm)	
DIRECTION OF TURN	R
P.C. DIA.	16.175

THREAD LENGTH

V_{300p}: ~

ep: ~

UNCHAMFERED USE ■R0.5 □R1 □R

ROUGH M/C	FIN M/C	GRD
25a	6.3a	0.4a

SCALE 1:X

NORMAL TOLERANCE mm

UP TO 6	6 30	30 120	120 300	300 600	600 1200	1200 2400	OVER 2400
±0.1	±0.2	±0.3	±0.4	±0.5	±0.8	±1.0	±1.5

HIWIN® BALLSCREWS

MAT.	SH: ROLLED
	NT: SNCM220/Equivalent
THREAD BALL TRACK HRC 56 ~ 62	
DATE	2008.11.28
DWG	Eric
APPD	Michelle
PROCESS NO.	G
CUSTR	LETROMEC(M)
DWG.NO.	A11DUPA1

*BREAK SHARP EDGE UNLESS OTHER SPECIFIED.
*未會倒角者以R0.5MAX

THREAD END ALLOWS ABOVE LENGTH OUT OF HARDNESS TOLERANCE

DATE	MODIFICATION	APPROVED

* PLEASE IGNORE CHINESE CHARACTERS WHICH ARE FOR OUR REFERENCE ONLY.

A-157

A11DHLA1 | Released by HIWIN design group.

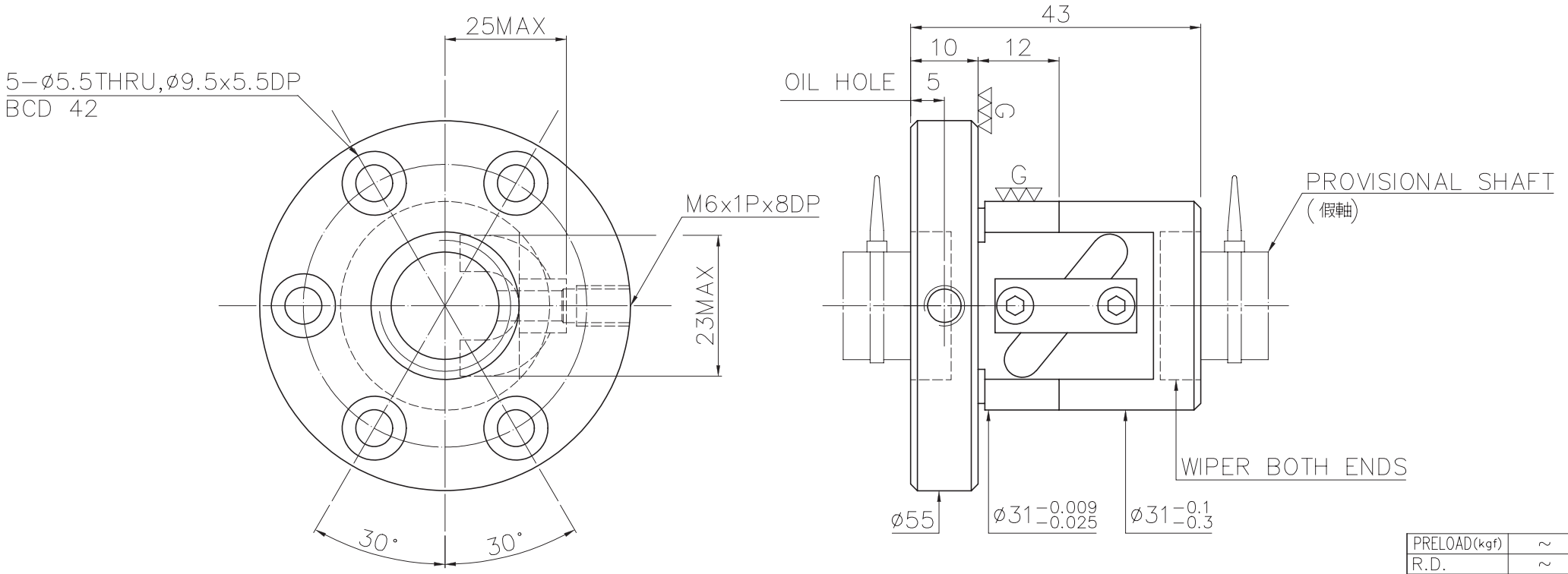

SPEC: R16−5B1−FSV

MAX. AXIAL LOAD (kgf)		LUBRICATION		BALL DIA.	3.175
MAX. ROTATIONAL SPEED (rpm)		SPACE BALL		BACKLASH	0.04MAX
DN VALUE		E1 TYPE ASSEMBLY METHOD		CIRCUIT	2.5*1
MAX. FEED RATE (m/min)		CUSTOMER DRAWING NO.		LEAD ANGLE	5.62°
ACCELERATION (m/sec²)		CUSTOMER MC TYPE		DYNAMIC (kgf)	679
SUPPORT METHOD		CUSTOMER AXIAL TYPE		STATIC (kgf)	1226
				LEAD	5

PRELOAD (kgf)	~
R.D.	~
S.F. (kgf)	~
DRAG TORQUE (kgf-cm)	~
DIRECTION OF TURN	R
P.C. DIA.	16.175

THREAD LENGTH

V_{300p}: ~

ep: ~

UNCHAMFERED USE ■R0.5 □R1 □R

ROUGH M/C 25a | FIN M/C 6.3a | GRD 0.4a

SCALE 1:X

NORMAL TOLERANCE mm

UP TO 6	6 30	30 120	120 300	300 600	600 1200	1200 2400	OVER 2400
±0.1	±0.2	±0.3	±0.4	±0.5	±0.8	±1.0	±1.5

HIWIN® BALLSCREWS

MAT.	SH: ROLLED	DATE	2008.11.11
	NT: SNCM220/Equivalent	DWG	Chunlin
THREAD BALL TRACK HRC 56 ~ 62		APPD	Michelle
		PROCESS NO.	G
CUSTR	LETROMEC(M)		
DWG.NO.	A11DHLA1		

*BREAK SHARP EDGE UNLESS OTHER SPECIFIED.
*未畫倒角者以R0.5MAX

THREAD END ALLOWS ABOVE LENGTH OUT OF HARDNESS TOLERANCE

DATE	MODIFICATION	APPROVED

* PLEASE IGNORE CHINESE CHARACTERS WHICH ARE FOR OUR REFERENCE ONLY.

A10VECA1 | Released by HIWIN design group.

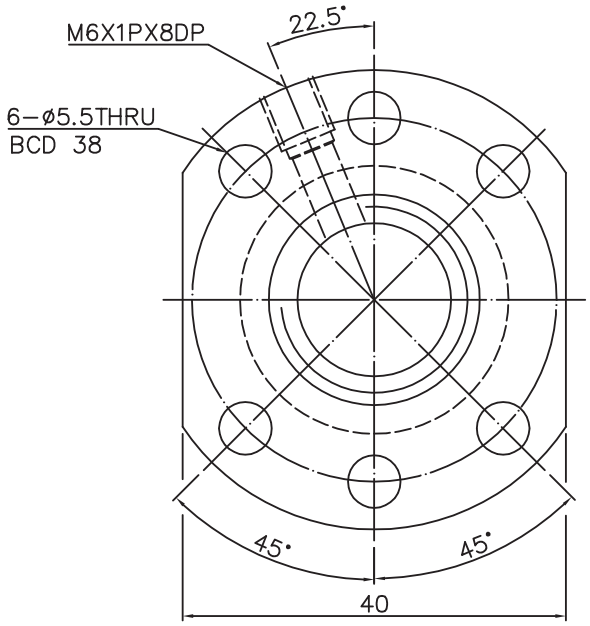

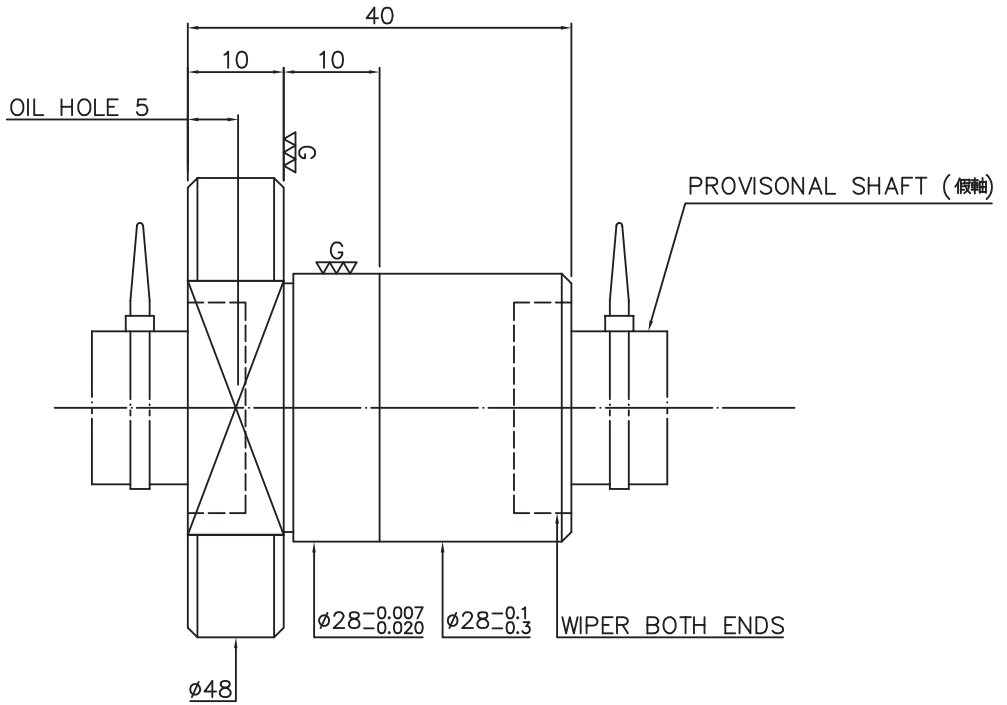

SPEC: R16-5T3-FSI

MAX. AXIAL LOAD (kgf)		LUBRICATION		PRELOAD (kgf)	~
MAX. ROTATIONAL SPEED (rpm)		SPACE BALL		R.D.	~
DN VALUE		E1 TYPE ASSEMBLY METHOD		S.F. (kgf)	~
MAX. FEED RATE (m/min)		CUSTOMER DRAWING NO.		DRAG TORQUE (kgf-cm)	~
ACCELERATION (m/sec²)		CUSTOMER NC TYPE		DIRECTION OF TURN	R
SUPPORT METHOD		CUSTOMER AXIAL TYPE		P.C. DIA.	16.175
				BALL DIA.	3.175
				BACKLASH	0.04MAX
				CIRCUIT	3
				LEAD ANGLE	5.62
			⚠1	DYNAMIC (kgf)	664
			⚠2	STATIC (kgf)	1195
				LEAD	5

THREAD LENGTH

UNCHAMFERED USE □C0.5 ■C1 □C

ROUGH M/C	FIN M/C	GRD	SCALE
25a	6.3a	0.4a	1: X

NORMAL TOLERANCE mm

UP TO 6	6 30	30 120	120 300	300 600	600 1200	1200 2400	OVER 2400
±0.1	±0.2	±0.3	±0.4	±0.5	±0.8	±1.0	±1.5

V300p:	~
ep:	~

MAT.	SH: ROLLED	DATE	2010.06.22
	NT: SNCM220/Equivalent	DWG	Ford
THREAD BALL TRACK HRC 56 ~ 62		APPD	Cody
		PROCESS NO.	G
CUSTR	HIWIN		
DWG.NO.	A10VECA1		

HIWIN® BALLSCREWS

*BREAK SHARP EDGE UNLESS OTHER SPECIFIED.
*未畫倒角者去毛邊 (C0.2MAX)

THREAD END ALLOWS ABOVE LENGTH OUT OF HARDNESS TOLERANCE

DATE	MODIFICATION	APPROVED
2010.06.23	MOD. ⚠1~⚠2	Cody

* PLEASE IGNORE CHINESE CHARACTERS WHICH ARE FOR OUR REFERENCE ONLY.

A11DURA1 | Released by HIWIN design group.

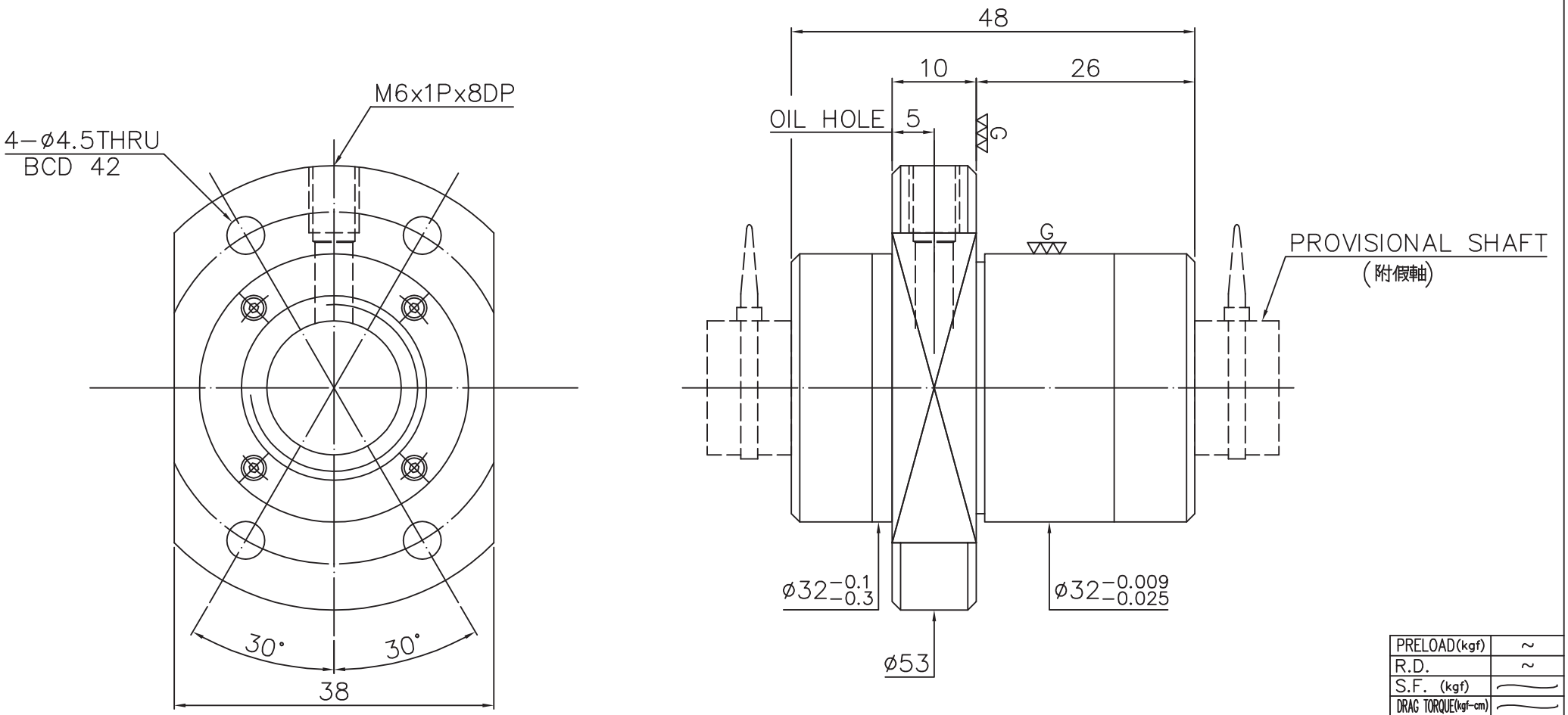

SPEC2R16−16S2−DFSH

MAX. AXIAL LOAD (kgf)		LUBRICATION		BALL DIA.	3.175
MAX. ROTATIONAL SPEED (rpm)		SPACE BALL		BACKLASH	0.04MAX
DN VALUE		E1 TYPE ASSEMBLY METHOD		CIRCUIT	1.8*2
MAX. FEED RATE (m/min)		CUSTOMER DRAWING NO.		LEAD ANGLE	17.04
ACCELERATION (m/sec²)		CUSTOMER MC TYPE		DYNAMIC (kgf)	708
SUPPORT METHOD		CUSTOMER AXIAL TYPE		STATIC (kgf)	1382
				LEAD / PITCH	16/8

PRELOAD (kgf)	~
R.D.	~
S.F. (kgf)	~
DRAG TORQUE (kgf-cm)	~
DIRECTION OF TURN	R
P.C. DIA.	16.62

THREAD LENGTH

V_{300p}: ~

ep: ~

UNCHAMFERED USE □RO.5 ■R1 □R

ROUGH M/C	FIN M/C	GRD	SCALE
25a	6.3a	0.4a	1:X

NORMAL TOLERANCE mm

UP TO 6	6 30	30 120	120 300	300 600	600 1200	1200 2400	OVER 2400
±0.1	±0.2	±0.3	±0.4	±0.5	±0.8	±1.0	±1.5

MAT.	SH: ROLLED	DATE	2008.11.28
	NT: SNCM220/Equivalent	DWG	Eric
THREAD BALL TRACK HRC 56 ~ 62		APPD	Michelle
		PROCESS NO.	G
CUSTR	LETROMEC(M)		
DWG.NO.	A11DURA1		

HIWIN® BALLSCREWS

*BREAK SHARP EDGE UNLESS OTHER SPECIFIED.
*未畫倒角者以R0.5MAX

THREAD END ALLOWS ABOVE LENGTH OUT OF HARDNESS TOLERANCE

DATE	MODIFICATION	APPROVED

* PLEASE IGNORE CHINESE CHARACTERS WHICH ARE FOR OUR REFERENCE ONLY.

1	2	3	4	5	6	7	8	9
A11DHMA1	Released by HIWIN design group.		▽(▽▽) G					

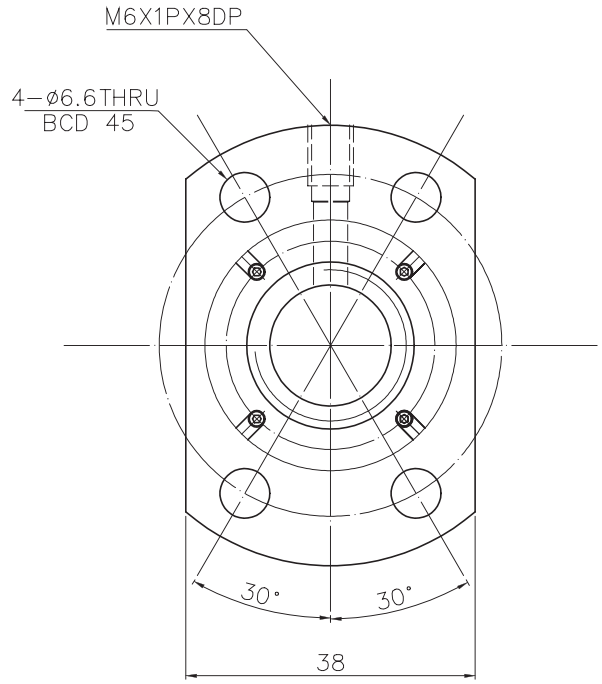

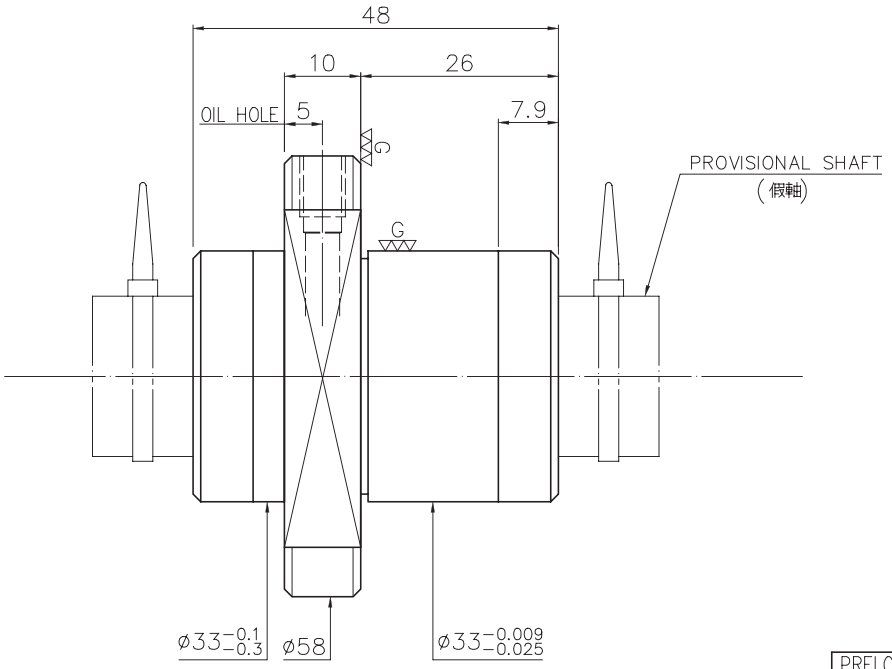

SPEC:2R16−16S2−DFSH

MAX. AXIAL LOAD (kgf)		LUBRICATION		PRELOAD(kgf)	~
MAX. ROTATIONAL SPEED (rpm)		SPACE BALL		R.D.	~
DN VALUE		E1 TYPE ASSEMBLY METHOD		S.F. (kgf)	~
MAX. FEED RATE (m/min)		CUSTOMER DRAWING NO.		DRAG TORQUE(kgf-cm)	~
ACCELERATION (m/sec²)		CUSTOMER MC TYPE		DIRECTION OF TURN	R
SUPPORT METHOD		CUSTOMER AXIAL TYPE		P.C. DIA.	16.62
				BALL DIA.	3.175
				BACKLASH	0.04MAX
				CIRCUIT	1.8*2
				LEAD ANGLE	17.04
				DYNAMIC (kgf)	708
				STATIC (kgf)	1382
				LEAD / PITCH	16/8

THREAD LENGTH

+ 0 −

T_p $+e_p$ $-e_p$

V_{300p}: ~

ep: ~

UNCHAMFERED USE ■R0.5 □R1 □R

ROUGH M/C	FIN M/C	GRD	SCALE
25a ▽	6.3a ▽▽	0.4a ▽▽▽	1:X

NORMAL TOLERANCE mm

UP TO 6	6 30	30 120	120 300	300 600	600 1200	1200 2400	OVER 2400
±0.1	±0.2	±0.3	±0.4	±0.5	±0.8	±1.0	±1.5

HIWIN® BALLSCREWS

MAT.	SH: ROLLED	DATE	2008.11.11
	NT: SNCM220/Equivalent	DWG	Chunlin
THREAD BALL TRACK HRC 56 ~ 62		APPD	Michelle
		PROCESS NO.	G
CUSTR	LETROMEC(M)		
DWG.NO.	A11DHMA1		

*BREAK SHARP EDGE UNLESS OTHER SPECIFIED.
*未畫倒角者以R0.5MAX

◐ THREAD END ALLOWS ABOVE LENGTH OUT OF HARDNESS TOLERANCE

DATE	MODIFICATION	APPROVED

* PLEASE IGNORE CHINESE CHARACTERS WHICH ARE FOR OUR REFERENCE ONLY.

A-161

1	2	3	4	5	6	7	8	9
A10XM6A1	Released by HIWIN design group.		G					

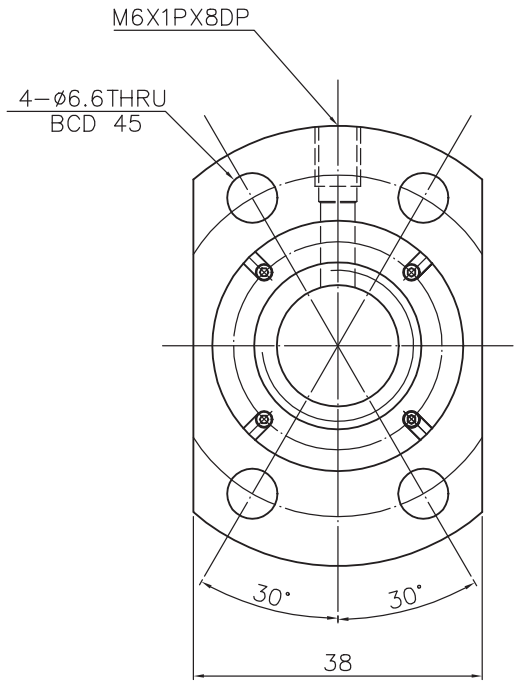

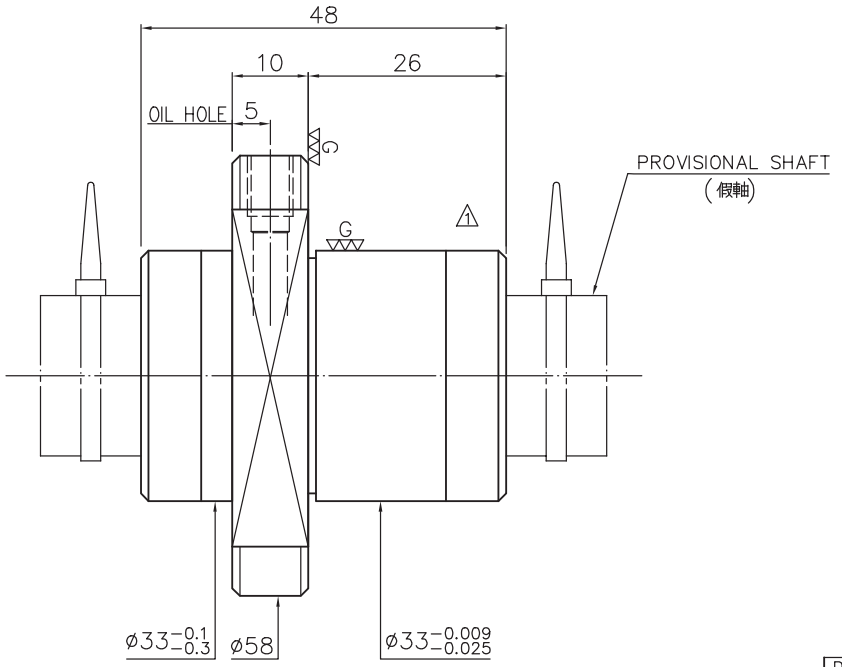

5 SPEC: 4R16−16S2−DFSH

MAX. AXIAL LOAD (kgf)		LUBRICATION		PRELOAD (kgf)	~
MAX. ROTATIONAL SPEED (rpm)		SPACE BALL	2	R.D.	~
DN VALUE		E1 TYPE ASSEMBLY METHOD		S.F. (kgf)	
MAX. FEED RATE (m/min)		CUSTOMER DRAWING NO.		DRAG TORQUE (kgf-cm)	
ACCELERATION (m/sec²)		CUSTOMER MC TYPE	3	DIRECTION OF TURN	R
SUPPORT METHOD		CUSTOMER AXIAL TYPE	4	P.C. DIA.	16.62
				BALL DIA.	3.175
				BACKLASH	0.04MAX
				CIRCUIT	1.8*2
				LEAD ANGLE	17.04
				DYNAMIC (kgf)	780
				STATIC (kgf)	1830
				LEAD	16

THREAD LENGTH

+ 0 −

T_p $+e_p$ $-e_p$

V_{300p}: ~

ep: ~

UNCHAMFERED USE ☐C0.5 ■C1 ☐C

ROUGH M/C	FIN M/C	GRD
25a	6.3a	0.4a

SCALE 1: X

NORMAL TOLERANCE mm

UP TO 6	6 30	30 120	120 300	300 600	600 1200	1200 2400	OVER 2400
±0.1	±0.2	±0.3	±0.4	±0.5	±0.8	±1.0	±1.5

HIWIN® BALLSCREWS

MAT.	SH: ROLLED	DATE	2006.01.11
	NT: SNCM220/Equivalent	DWG	Ming
THREAD BALL TRACK HRC 56 ~ 62		CHK	Kai
		APPD	Cody
CUSTR	HIWIN		
DWG.NO.	A10XM6A1		

*BREAK SHARP EDGE UNLESS OTHER SPECIFIED.
*未畫倒角者去毛邊 (C0.2MAX)

THREAD END ALLOWS ABOVE LENGTH OUT OF HARDNESS TOLERANCE

DATE	MODIFICATION	APPROVED
2012.06.16	MOD 5	Michelle
2012.03.22	MOD. 2~4	Cody
2010.11.19	MOD 1	陳榮輝

* PLEASE IGNORE CHINESE CHARACTERS WHICH ARE FOR OUR REFERENCE ONLY.

A-162

A11HSWA1 | Released by HIWIN design group.

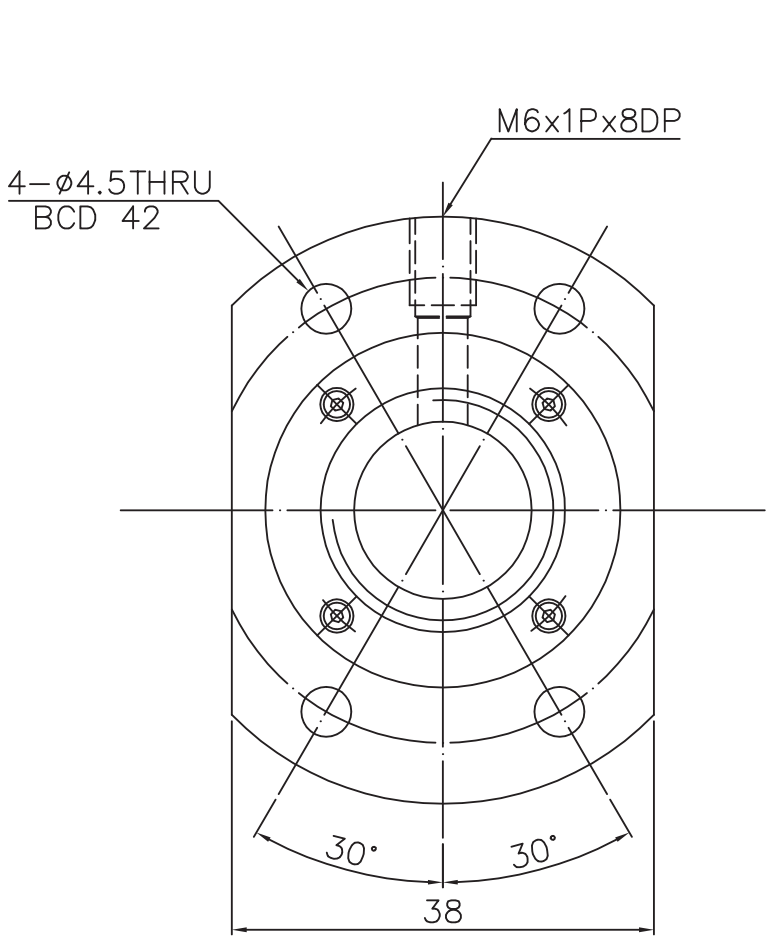

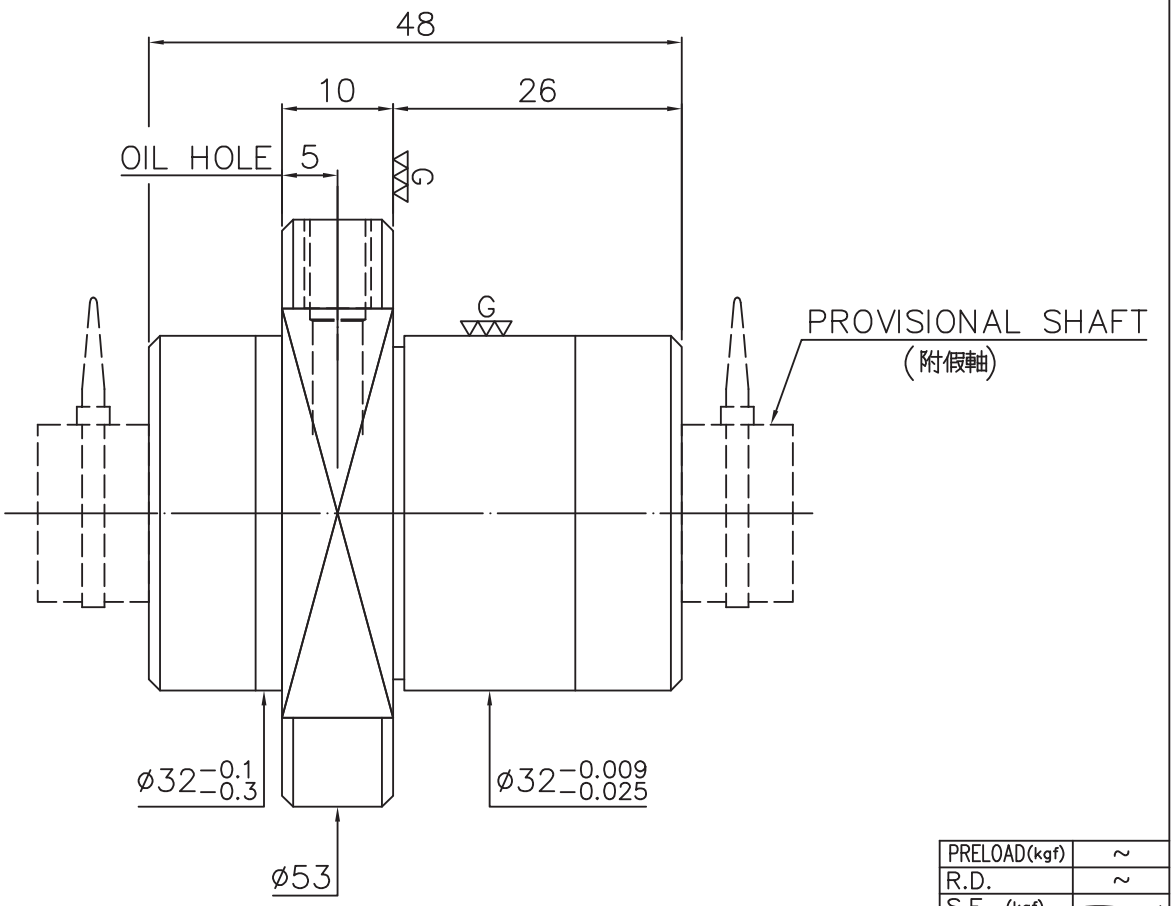

△1 SPEC:4R16−16S2−DFSH

MAX. AXIAL LOAD (kgf)		LUBRICATION		BALL DIA.	3.175
MAX. ROTATIONAL SPEED (rpm)		SPACE BALL		BACKLASH	0.04MAX
DN VALUE		E1 TYPE ASSEMBLY METHOD		CIRCUIT	1.8*2
MAX. FEED RATE (m/min)		CUSTOMER DRAWING NO.		LEAD ANGLE	17.04
ACCELERATION (m/sec²)		CUSTOMER MC TYPE		DYNAMIC (kgf)	708
SUPPORT METHOD		CUSTOMER AXIAL TYPE		STATIC (kgf)	1382
				LEAD / PITCH △2	16/4

PRELOAD (kgf)	~
R.D.	~
S.F. (kgf)	
DRAG TORQUE (kgf-cm)	
DIRECTION OF TURN	R
P.C. DIA.	16.62

THREAD LENGTH

UNCHAMFERED USE □RO.5 ■R1 □R

ROUGH M/C	FIN M/C	GRD
25a	6.3a	0.4a

SCALE 1:X

NORMAL TOLERANCE mm

UP TO 6	6 30	30 120	120 300	300 600	600 1200	1200 2400	OVER 2400
±0.1	±0.2	±0.3	±0.4	±0.5	±0.8	±1.0	±1.5

MAT.	SH: ROLLED / NT: SNCM220/Equivalent
THREAD BALL TRACK	HRC 56 ~ 62
DATE	2009.07.07
DWG	Rita
APPD	Lady
PROCESS NO.	G
CUSTR	LETROMEC (KL)
DWG.NO.	A11HSWA1

HIWIN® BALLSCREWS

*BREAK SHARP EDGE UNLESS OTHER SPECIFIED.
*未倒角者以R0.5MAX

THREAD END ALLOWS ABOVE LENGTH OUT OF HARDNESS TOLERANCE

V300p: ~
ep: ~

DATE	MODIFICATION	APPROVED
2009.12.10	MOD. △1~△2	Lady

* PLEASE IGNORE CHINESE CHARACTERS WHICH ARE FOR OUR REFERENCE ONLY.

A-163

A11DHNA1 | Released by HIWIN design group.

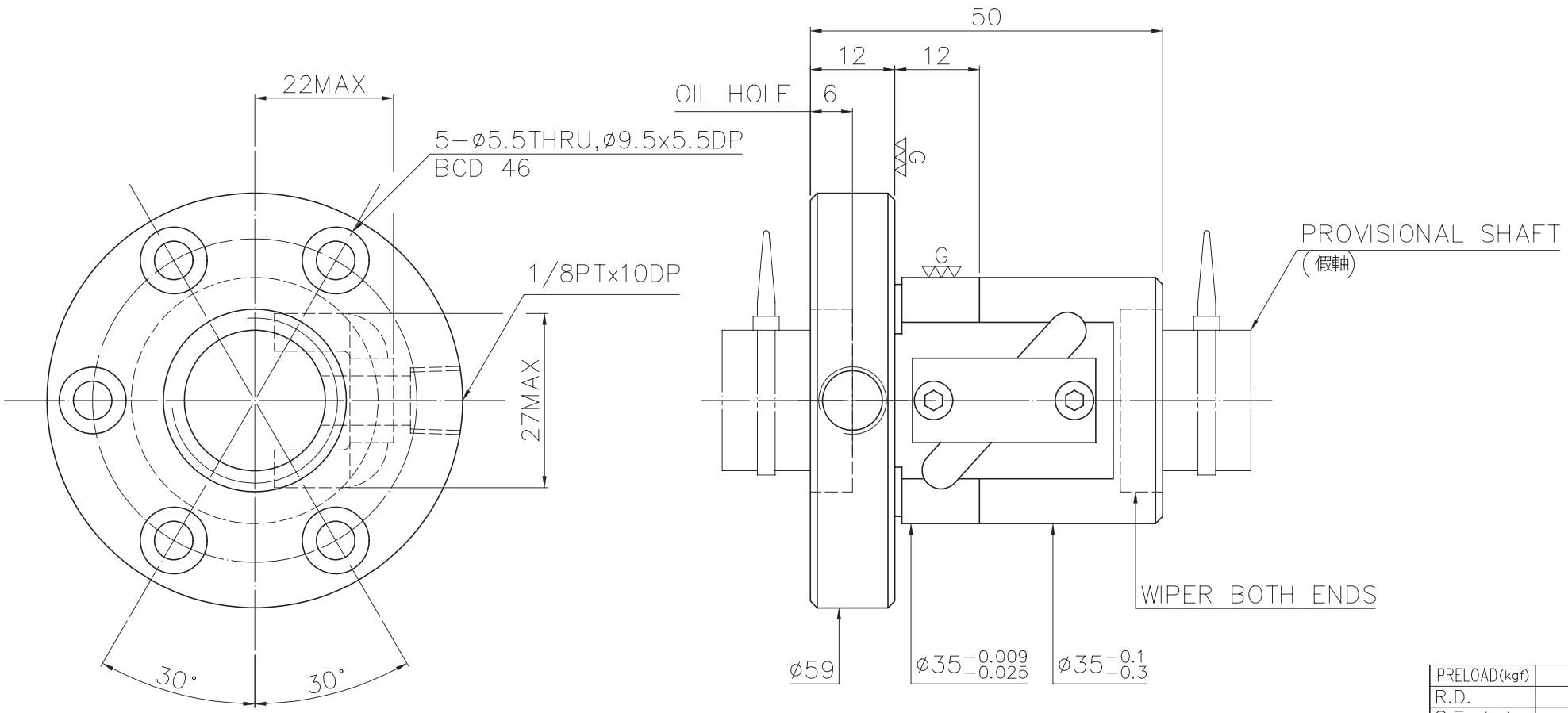

SPEC: R20−5C1−FSV

MAX. AXIAL LOAD (kgf)		LUBRICATION		PRELOAD (kgf)	~
MAX. ROTATIONAL SPEED (rpm)		SPACE BALL		R.D.	~
DN VALUE		E1 TYPE ASSEMBLY METHOD		S.F. (kgf)	~
MAX. FEED RATE (m/min)		CUSTOMER DRAWING NO.		DRAG TORQUE (kgf-cm)	~
ACCELERATION (m/sec²)		CUSTOMER MC TYPE		DIRECTION OF TURN	R
SUPPORT METHOD		CUSTOMER AXIAL TYPE		P.C. DIA.	20.2
				BALL DIA.	3.175
				BACKLASH	0.04MAX
				CIRCUIT	3.5*1
				LEAD ANGLE	4.51°
				DYNAMIC (kgf)	1001
				STATIC (kgf)	2149
				LEAD	5

THREAD LENGTH

V_{300p}: ~

ep: ~

UNCHAMFERED USE ■RO.5 □R1 □R

ROUGH M/C	FIN M/C	GRD
25a	6.3a	0.4a

SCALE 1: X

NORMAL TOLERANCE mm

UP TO 6	6 30	30 120	120 300	300 600	600 1200	1200 2400	OVER 2400
±0.1	±0.2	±0.3	±0.4	±0.5	±0.8	±1.0	±1.5

HIWIN® BALLSCREWS

MAT.	SH: ROLLED	DATE	2008.11.11
	NT: SNCM220/Equivalent	DWG	Chunlin
THREAD BALL TRACK HRC 56 ~ 62		APPD	Michelle
		PROCESS NO.	G
CUSTR	LETROMEC(M)		
DWG.NO.	A11DHNA1		

*BREAK SHARP EDGE UNLESS OTHER SPECIFIED.
*未畫倒角者以R0.5MAX

◐ THREAD END ALLOWS ABOVE LENGTH OUT OF HARDNESS TOLERANCE

DATE	MODIFICATION	APPROVED

* PLEASE IGNORE CHINESE CHARACTERS WHICH ARE FOR OUR REFERENCE ONLY.

A10A0KA1 | Released by HIWIN design group.

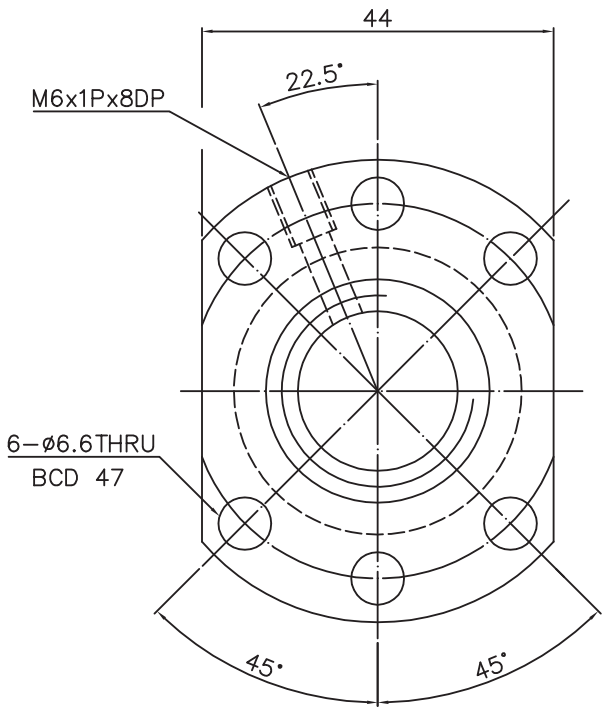

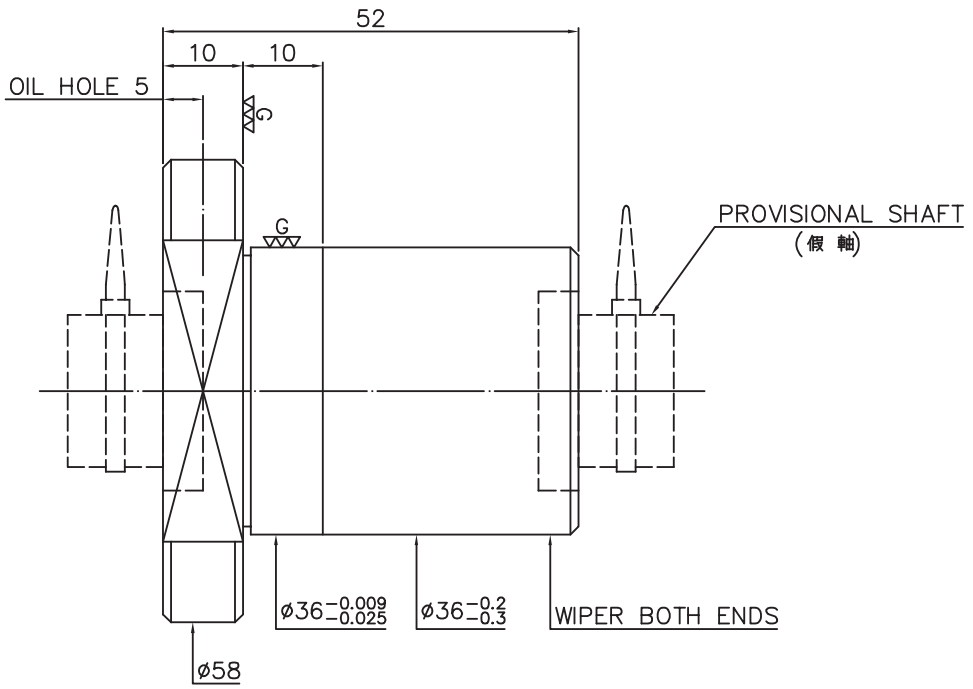

SPEC:R20−5T4−FSI

MAX. AXIAL LOAD (kgf)		LUBRICATION		BALL DIA.	3.175
MAX. ROTATIONAL SPEED (rpm)		SPACE BALL		BACKLASH	0.04MAX
DN VALUE		E1 TYPE ASSEMBLY METHOD		CIRCUIT	4
MAX. FEED RATE (m/min)		CUSTOMER DRAWING NO.		LEAD ANGLE	4.51
ACCELERATION (m/sec²)		CUSTOMER MC TYPE		DYNAMIC (kgf)	938
SUPPORT METHOD		CUSTOMER AXIAL TYPE		STATIC (kgf)	1993
				LEAD	5

PRELOAD(kgf)	~
R.D.	~
S.F. (kgf)	
DRAG TORQUE(kgf-cm)	
DIRECTION OF TURN	R
P.C. DIA.	20.2

THREAD LENGTH

UNCHAMFERED USE □C0.5 ■C1 □C

ROUGH M/C	FIN M/C	GRD	SCALE
25a	6.3a	0.4a	1:X

NORMAL TOLERANCE mm

UP TO 6	6 30	30 120	120 300	300 600	600 1200	1200 2400	OVER 2400
±0.1	±0.2	±0.3	±0.4	±0.5	±0.8	±1.0	±1.5

MAT.	SH: ROLLED	DATE	2010.06.22
	NT: SNCM220/Equivalent	DWG	Ford
THREAD BALL TRACK HRC 56 ~ 62		APPD	Cody
		PROCESS NO.	G
CUSTR	HIWIN		
DWG.NO.	A10A0KA1		

HIWIN® BALLSCREWS

*BREAK SHARP EDGE UNLESS OTHER SPECIFIED.
*未畫倒角者去毛邊 (C0.2MAX)

THREAD END ALLOWS ABOVE LENGTH OUT OF HARDNESS TOLERANCE

V300p: ~
ep: ~

DATE	MODIFICATION	APPROVED

* PLEASE IGNORE CHINESE CHARACTERS WHICH ARE FOR OUR REFERENCE ONLY.

A11DHQA1 | Released by HIWIN design group.

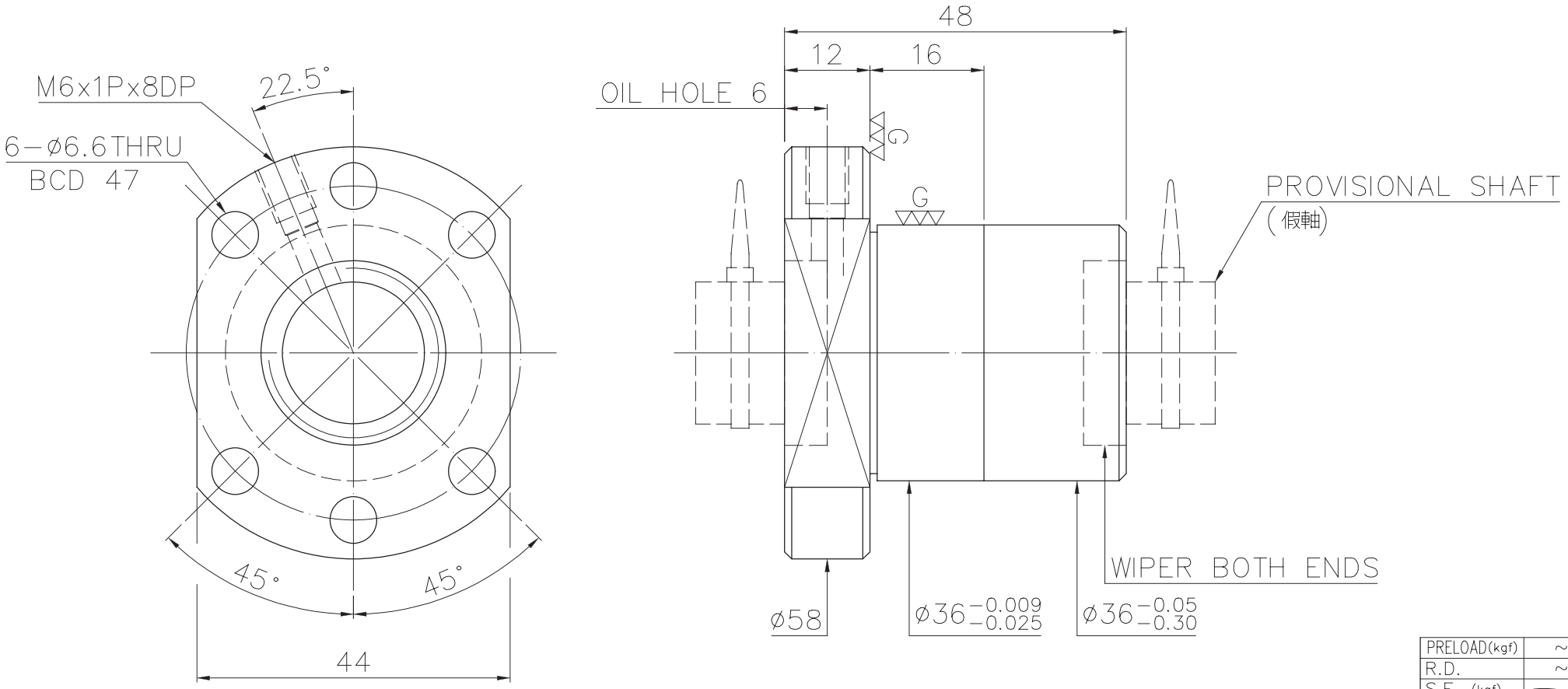

SPEC: R20−10K3−FSC

MAX. AXIAL LOAD (kgf)		LUBRICATION		PRELOAD (kgf)	~
MAX. ROTATIONAL SPEED (rpm)		SPACE BALL		R.D.	~
DN VALUE		E1 TYPE ASSEMBLY METHOD		S.F. (kgf)	
MAX. FEED RATE (m/min)		CUSTOMER DRAWING NO.		DRAG TORQUE (kgf-cm)	
ACCELERATION (m/sec²)		CUSTOMER MC TYPE		DIRECTION OF TURN	R
SUPPORT METHOD		CUSTOMER AXIAL TYPE		P.C. DIA.	19.9
				BALL DIA.	3.175
				BACKLASH	0.04MAX
				CIRCUIT	3
				LEAD ANGLE	9.09
				DYNAMIC (kgf)	990
				STATIC (kgf)	2268
				LEAD	10

THREAD LENGTH

V_{300p}: ~

ep: ~

UNCHAMFERED USE □R0.5 ■R1 □R

ROUGH M/C	FIN M/C	GRD	SCALE
25a	6.3a	0.4a	1 : X

NORMAL TOLERANCE mm

UP TO 6	6 TO 30	30 TO 120	120 TO 300	300 TO 600	600 TO 1200	1200 TO 2400	OVER 2400
±0.1	±0.2	±0.3	±0.4	±0.5	±0.8	±1.0	±1.5

HIWIN® BALLSCREWS

MAT.	SH: ROLLED	DATE	2008.11.11
	NT: SNCM220/Equivalent	DWG	EDWARD
THREAD BALL TRACK HRC 56 ~ 62		APPD	Michelle
		PROCESS NO.	G
CUSTR	LETROMEC(M)		
DWG.NO.	A11DHQA1		

*BREAK SHARP EDGE UNLESS OTHER SPECIFIED.
*未畫倒角者以R0.5MAX

THREAD END ALLOWS ABOVE LENGTH OUT OF HARDNESS TOLERANCE

DATE	MODIFICATION	APPROVED

* PLEASE IGNORE CHINESE CHARACTERS WHICH ARE FOR OUR REFERENCE ONLY.

A11YIFA1 | Released by HIWIN design group.

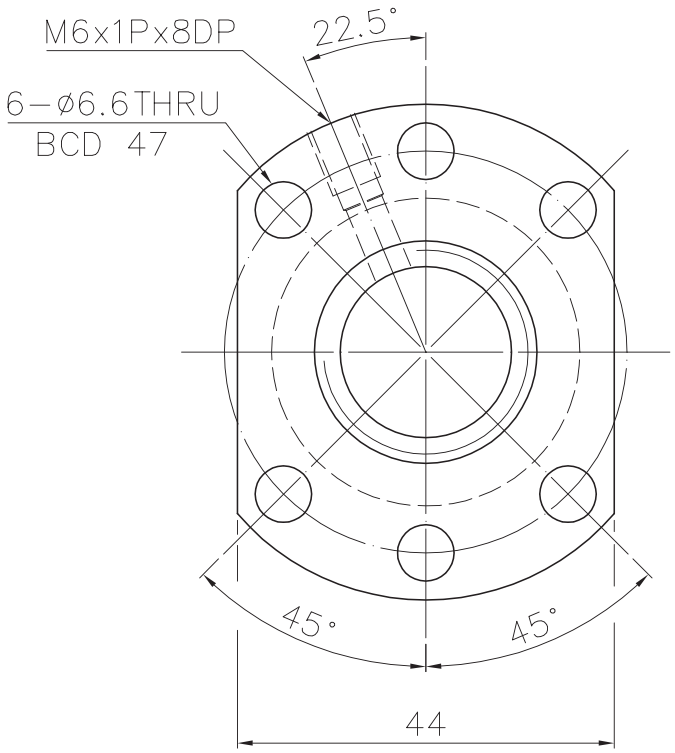

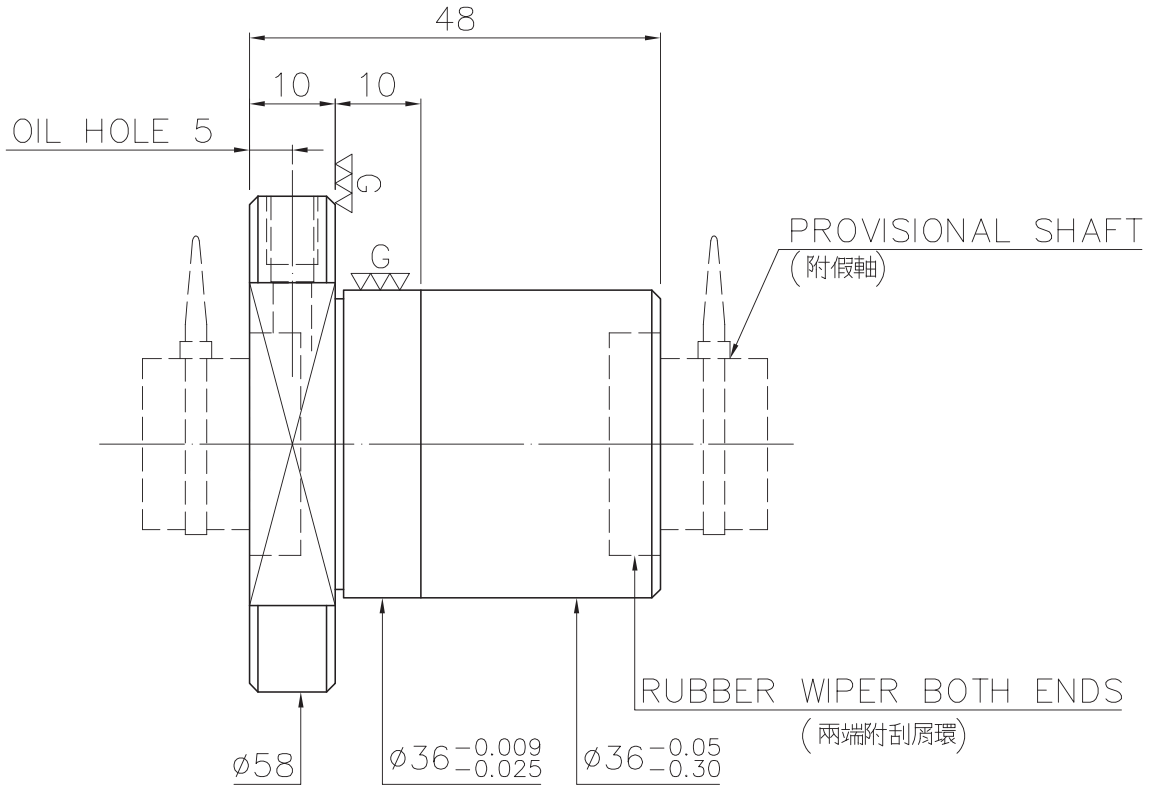

SPEC: R20-10K3-FSCNW △1

MAX. AXIAL LOAD (kgf)		LUBRICATION		PRELOAD (kgf)	~
MAX. ROTATIONAL SPEED (rpm)		SPACE BALL		R.D.	~
DN VALUE		E1 TYPE ASSEMBLY METHOD		S.F. (kgf)	
MAX. FEED RATE (m/min)		CUSTOMER DRAWING NO.		DRAG TORQUE (kgf-cm)	
ACCELERATION (m/sec²)		CUSTOMER MC TYPE		DIRECTION OF TURN	R
SUPPORT METHOD		CUSTOMER AXIAL TYPE		P.C. DIA.	19.9
				BALL DIA.	3.175
				BACKLASH	0.04MAX
				CIRCUIT	3
				LEAD ANGLE	9.09
				DYNAMIC (kgf)	990
				STATIC (kgf)	2260
				LEAD	10

THREAD LENGTH

V_{300p}: ~

ep: ~

UNCHAMFERED USE ☐C0.5 ■C1 ☐C

ROUGH M/C	FIN M/C	GRD	SCALE
25a ▽	6.3a ▽▽	0.4a ▽▽▽	1:X

NORMAL TOLERANCE mm

UP TO 6	6 30	30 120	120 300	300 600	600 1200	1200 2400	OVER 2400
±0.1	±0.2	±0.3	±0.4	±0.5	±0.8	±1.0	±1.5

MAT.	SH: ROLLED	DATE	2011.06.27
	NT: SNCM220/Equivalent	DWG	Sally
THREAD BALL TRACK HRC 56 ~ 62		CHK	Kai
		APPD	Cody
CUSTR	HIWIN STD.		
DWG.NO.	A11YIFA1		

HIWIN® BALLSCREWS

*BREAK SHARP EDGE UNLESS OTHER SPECIFIED.
*未畫倒角者去毛邊 (C0.2MAX)

◐ THREAD END ALLOWS ABOVE LENGTH OUT OF HARDNESS TOLERANCE

DATE	MODIFICATION	APPROVED
2012.03.30	MOD. △1	Cody

* PLEASE IGNORE CHINESE CHARACTERS WHICH ARE FOR OUR REFERENCE ONLY.

A11DHRA1 | Released by HIWIN design group.

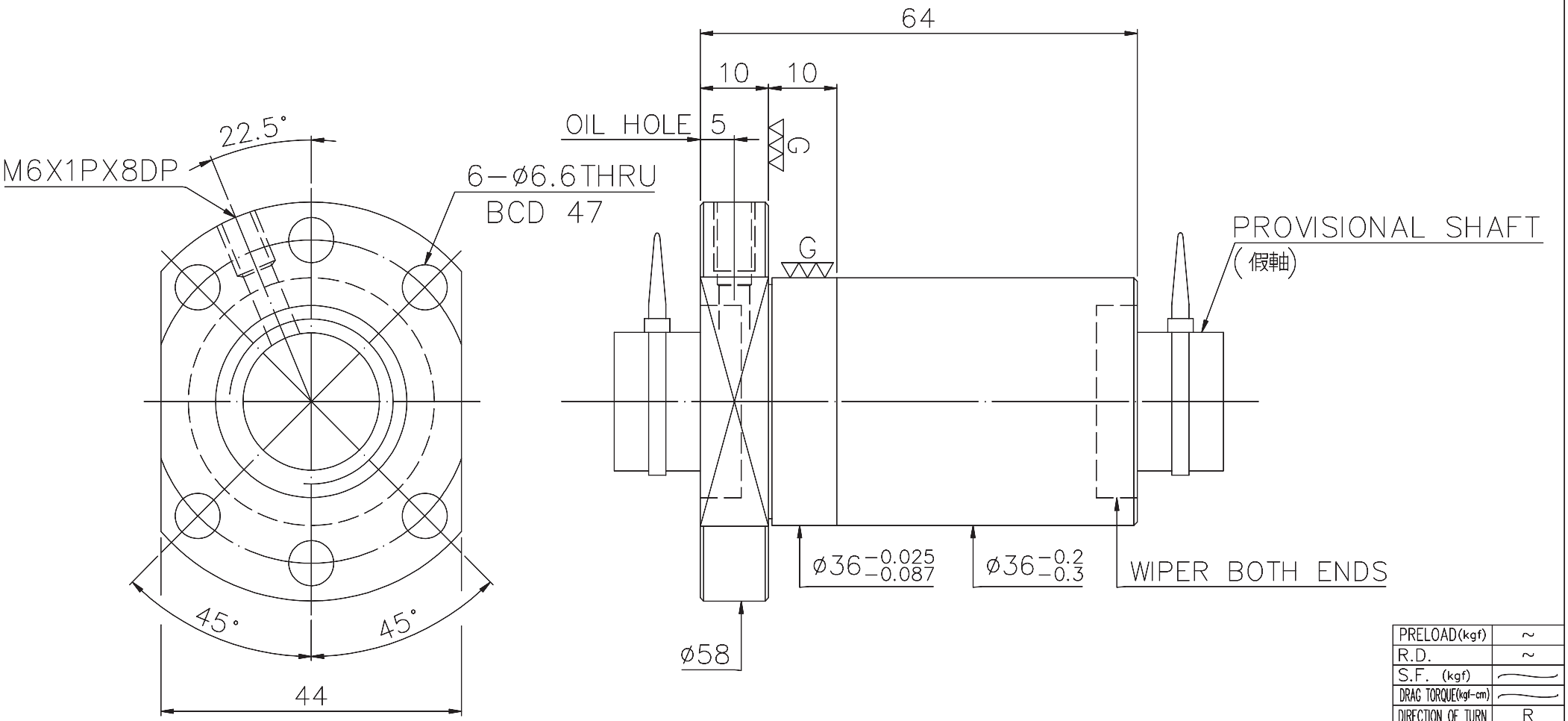

SPEC: R20−10T3−FSI

MAX. AXIAL LOAD (kgf)		LUBRICATION		PRELOAD (kgf)	~
MAX. ROTATIONAL SPEED (rpm)		SPACE BALL		R.D.	~
DN VALUE		E1 TYPE ASSEMBLY METHOD		S.F. (kgf)	~
MAX. FEED RATE (m/min)		CUSTOMER DRAWING NO.		DRAG TORQUE (kgf-cm)	~
ACCELERATION (m/sec²)		CUSTOMER MC TYPE		DIRECTION OF TURN	R
SUPPORT METHOD		CUSTOMER AXIAL TYPE		P.C. DIA.	20.85
				BALL DIA.	4.763
				BACKLASH	0.05MAX
				CIRCUIT	3
				LEAD ANGLE	8.68
				DYNAMIC (kgf)	1149
				STATIC (kgf)	2042
				LEAD	10

THREAD LENGTH

V_{300p}: ~

ep: ~

UNCHAMFERED USE □RO.5 ■R1 □R

ROUGH M/C	FIN M/C	GRD
25a	6.3a	0.4a

SCALE 1: X

NORMAL TOLERANCE mm

UP TO 6	6 30	30 120	120 300	300 600	600 1200	1200 2400	OVER 2400
±0.1	±0.2	±0.3	±0.4	±0.5	±0.8	±1.0	±1.5

MAT. SH: ROLLED | NT: SNCM220/Equivalent

THREAD BALL TRACK HRC 56 ~ 62

DATE	2008.11.11
DWG	EDWARD
APPD	Michelle
PROCESS NO.	G
CUSTR	LETROMEC(M)
DWG.NO.	A11DHRA1

HIWIN® BALLSCREWS

*BREAK SHARP EDGE UNLESS OTHER SPECIFIED.
*未倒角者以R0.5MAX

◐ THREAD END ALLOWS ABOVE LENGTH OUT OF HARDNESS TOLERANCE

DATE	MODIFICATION	APPROVED

* PLEASE IGNORE CHINESE CHARACTERS WHICH ARE FOR OUR REFERENCE ONLY.

A11DHSA1 | Released by HIWIN design group.

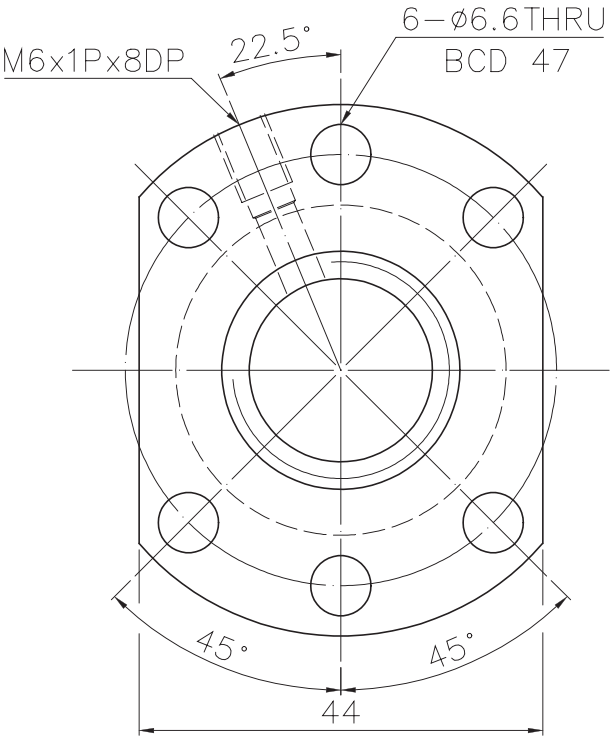

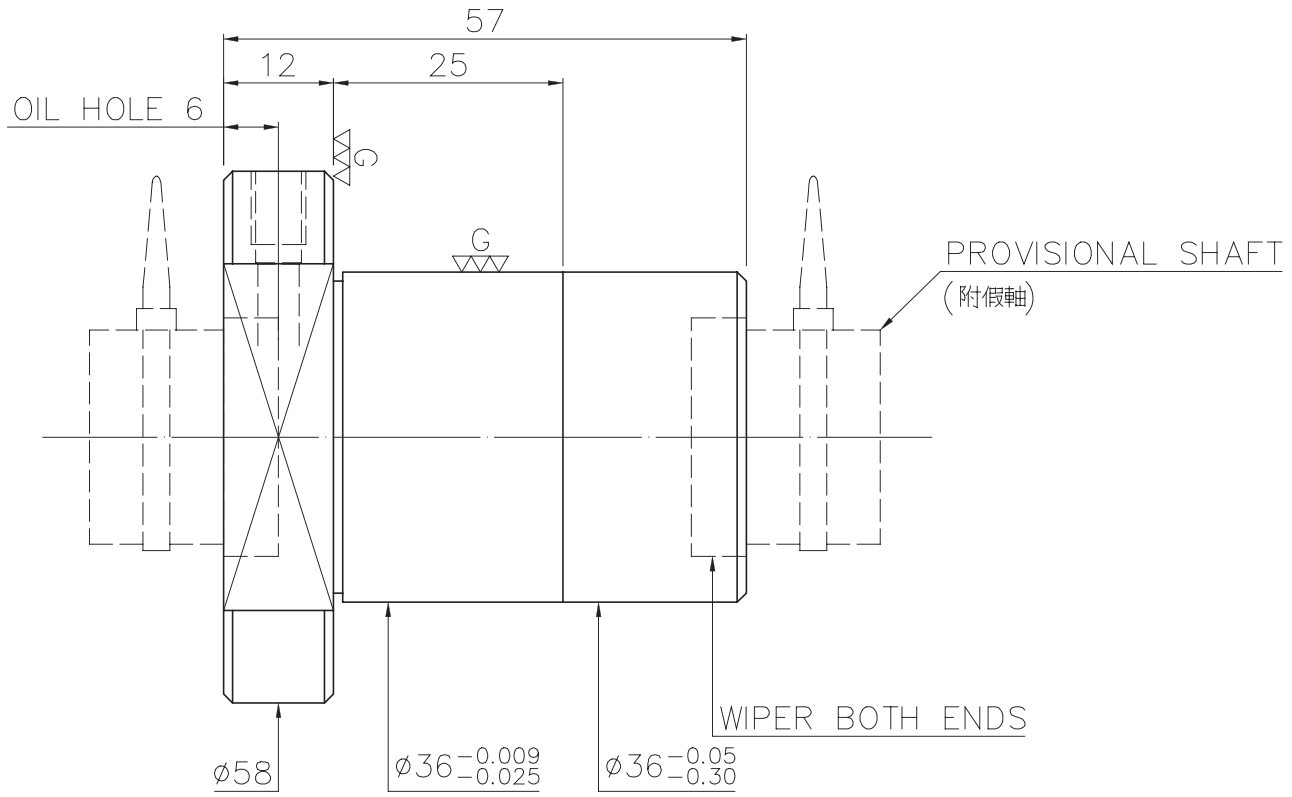

SPEC: 4R20-20K2-FSC

MAX. AXIAL LOAD (kgf)		LUBRICATION		PRELOAD (kgf)	~
MAX. ROTATIONAL SPEED (rpm)		SPACE BALL		R.D.	~
DN VALUE		E1 TYPE ASSEMBLY METHOD		S.F. (kgf)	
MAX. FEED RATE (m/min)		CUSTOMER DRAWING NO.		DRAG TORQUE (kgf-cm)	
ACCELERATION (m/sec²)		CUSTOMER MC TYPE		DIRECTION OF TURN	R
SUPPORT METHOD		CUSTOMER AXIAL TYPE		P.C. DIA.	20.36
				BALL DIA.	3.175
				BACKLASH	0.04MAX
				CIRCUIT	2
				LEAD ANGLE	17.36
				DYNAMIC (kgf)	690
				STATIC (kgf)	1560
				LEAD	20

THREAD LENGTH

V_{300p}: ~

ep: ~

UNCHAMFERED USE □RO.5 ■R1 □R

ROUGH M/C	FIN M/C	GRD	SCALE
25a	6.3a	0.4a	1: X

NORMAL TOLERANCE mm

UP TO 6	6 30	30 120	120 300	300 600	600 1200	1200 2400	OVER 2400
±0.1	±0.2	±0.3	±0.4	±0.5	±0.8	±1.0	±1.5

HIWIN® BALLSCREWS

MAT.	SH: ROLLED	DATE	2008.11.11
	NT: SNCM220/Equivalent	DWG	EDWARD
THREAD BALL TRACK HRC 56 ~ 62		APPD	Michelle
		PROCESS NO.	G
CUSTR	LETROMEC(M)		
DWG.NO.	A11DHSA1		

*BREAK SHARP EDGE UNLESS OTHER SPECIFIED.
*未畫倒角者以RO.5MAX

◐ THREAD END ALLOWS ABOVE LENGTH OUT OF HARDNESS TOLERANCE

DATE	MODIFICATION	APPROVED

* PLEASE IGNORE CHINESE CHARACTERS WHICH ARE FOR OUR REFERENCE ONLY.

A11DUSA2 | Released by HIWIN design group.

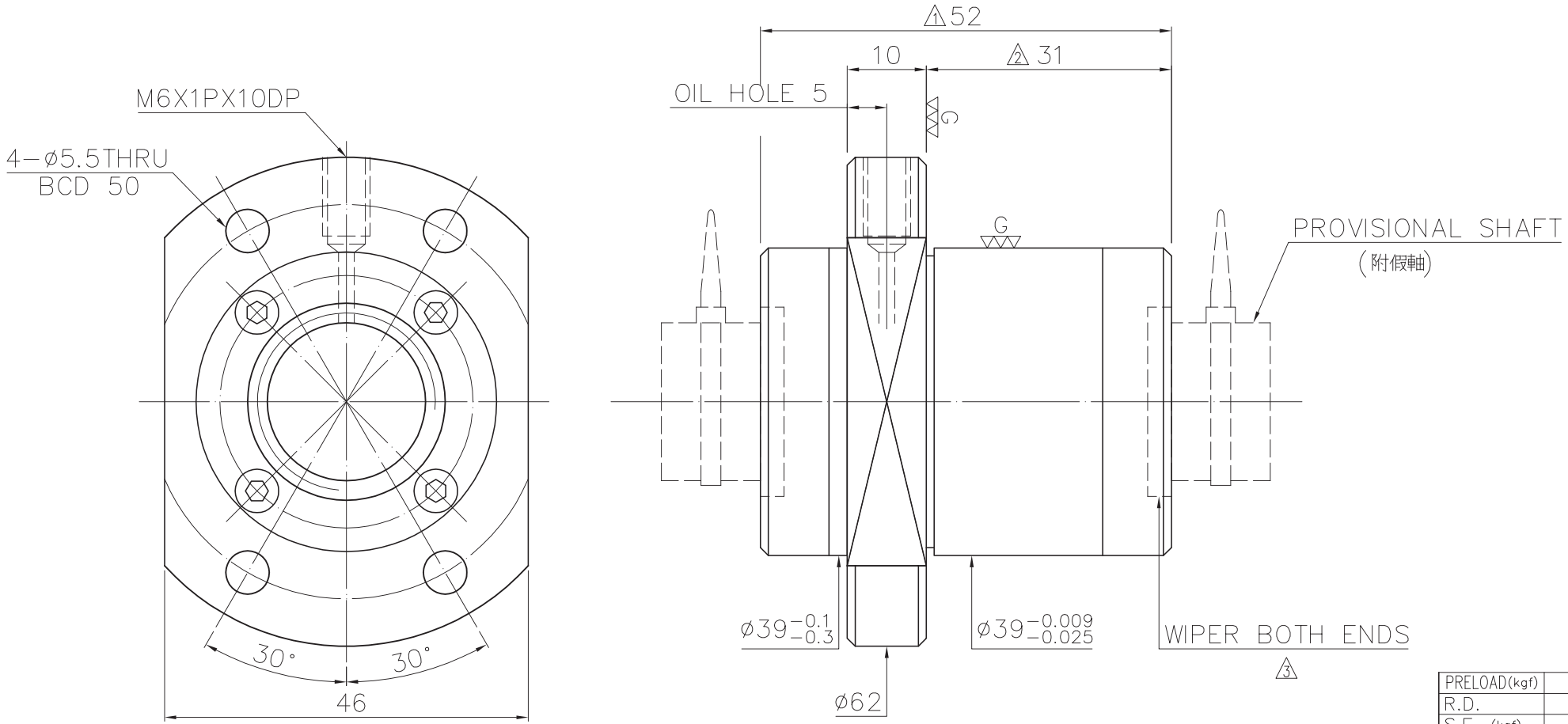

SPEC: 4R20−20S2−DFSH

MAX. AXIAL LOAD (kgf)		LUBRICATION		PRELOAD (kgf)	~
MAX. ROTATIONAL SPEED (rpm)		SPACE BALL		R.D.	~
DN VALUE		E1 TYPE ASSEMBLY METHOD		S.F. (kgf)	
MAX. FEED RATE (m/min)		CUSTOMER DRAWING NO.		DRAG TORQUE (kgf-cm)	
ACCELERATION (m/sec²)		CUSTOMER MC TYPE		DIRECTION OF TURN	R
SUPPORT METHOD		CUSTOMER AXIAL TYPE		P.C. DIA.	20.36
				BALL DIA.	3.175
				BACKLASH	0.04MAX
				CIRCUIT	1.8*2
				LEAD ANGLE	17.36
				DYNAMIC (kgf)	796
				STATIC (kgf)	1740
				LEAD/PITCH	20/10

THREAD LENGTH

V_{300p}: ~

ep: ~

UNCHAMFERED USE □C0.5 ■C1 □C

ROUGH M/C	FIN M/C	GRD
25a	6.3a	0.4a

SCALE 1: X

NORMAL TOLERANCE mm

UP TO 6	6 30	30 120	120 300	300 600	600 1200	1200 2400	OVER 2400
±0.1	±0.2	±0.3	±0.4	±0.5	±0.8	±1.0	±1.5

HIWIN® BALLSCREWS

MAT.	SH: ROLLED	DATE	2011.03.28
	NT: SNCM220/Equivalent	DWG	Akuan
THREAD BALL TRACK HRC 56 ~ 62		CHK	Sting
		APPD	Cody
CUSTR	LETROMEC(M)		
DWG.NO.	A11DUSA2		

*BREAK SHARP EDGE UNLESS OTHER SPECIFIED.
*未畫倒角者去毛邊 (C0.2MAX)

THREAD END ALLOWS ABOVE LENGTH OUT OF HARDNESS TOLERANCE

DATE	MODIFICATION	APPROVED
2011.03.28	MOD. △1~△3	Cody

* PLEASE IGNORE CHINESE CHARACTERS WHICH ARE FOR OUR REFERENCE ONLY.

A11DUTA1 | Released by HIWIN design group.

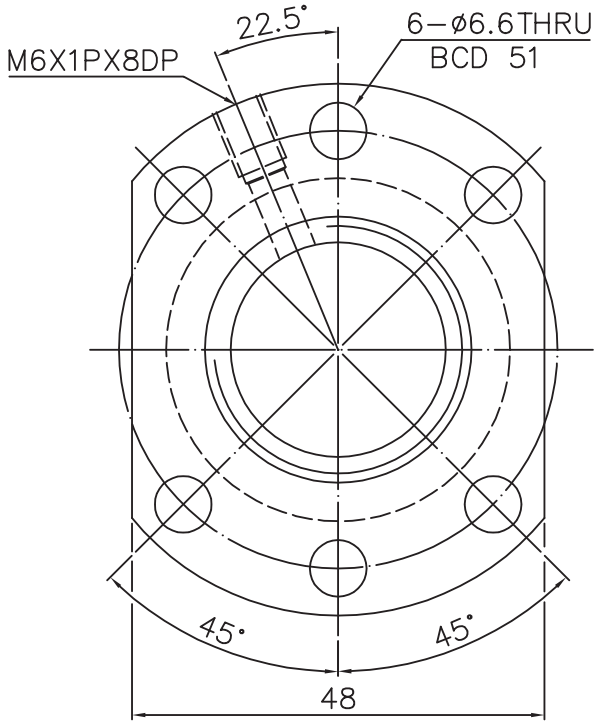

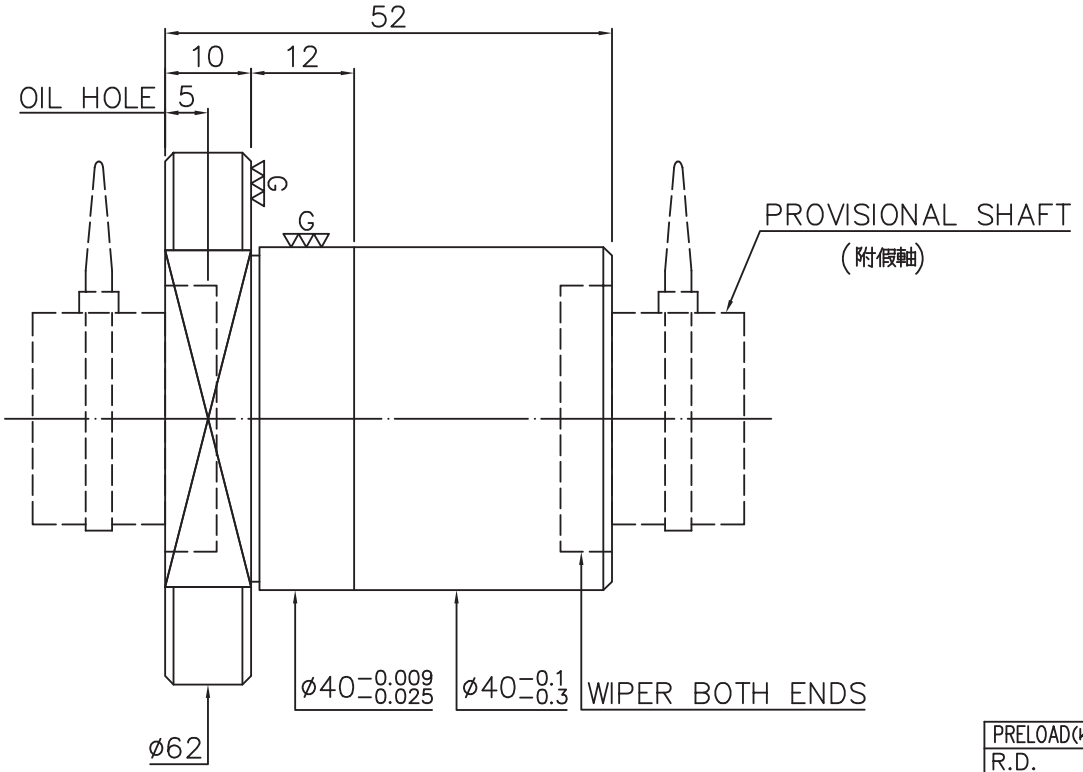

SPEC: R25−5T4−FSI

MAX. AXIAL LOAD (kgf)		LUBRICATION		BALL DIA.	3.175
MAX. ROTATIONAL SPEED (rpm)		SPACE BALL		BACKLASH	0.04MAX
DN VALUE		E1 TYPE ASSEMBLY METHOD		CIRCUIT	4
MAX. FEED RATE (m/min)		CUSTOMER DRAWING NO.		LEAD ANGLE	3.56
ACCELERATION (m/sec²)		CUSTOMER MC TYPE		DYNAMIC (kgf)	1127
SUPPORT METHOD		CUSTOMER AXIAL TYPE		STATIC (kgf)	2776
				LEAD	5

PRELOAD(kgf)	~
R.D.	~
S.F. (kgf)	
DRAG TORQUE(kgf-cm)	
DIRECTION OF TURN	R
P.C. DIA.	25.57

THREAD LENGTH

V_{300p}: ~

ep: ~

UNCHAMFERED USE □RO.5 ■R1 □R

ROUGH M/C	FIN M/C	GRD
25a	6.3a	0.4a

SCALE 1: X

NORMAL TOLERANCE mm

UP TO 6	6 30	30 120	120 300	300 600	600 1200	1200 2400	OVER 2400
±0.1	±0.2	±0.3	±0.4	±0.5	±0.8	±1.0	±1.5

HIWIN® BALLSCREWS

MAT.	SH: ROLLED	DATE	2008.12.01
	NT: SNCM220/Equivalent	DWG	Eric
THREAD BALL TRACK HRC 56 ~ 62		APPD	Michelle
		PROCESS NO.	G
CUSTR	LETROMEC(M)		
DWG.NO.	A11DUTA1		

*BREAK SHARP EDGE UNLESS OTHER SPECIFIED.
*未倒角者以R0.5MAX

THREAD END ALLOWS ABOVE LENGTH OUT OF HARDNESS TOLERANCE

DATE	MODIFICATION	APPROVED

* PLEASE IGNORE CHINESE CHARACTERS WHICH ARE FOR OUR REFERENCE ONLY.

A11DHUA1 | Released by HIWIN design group.

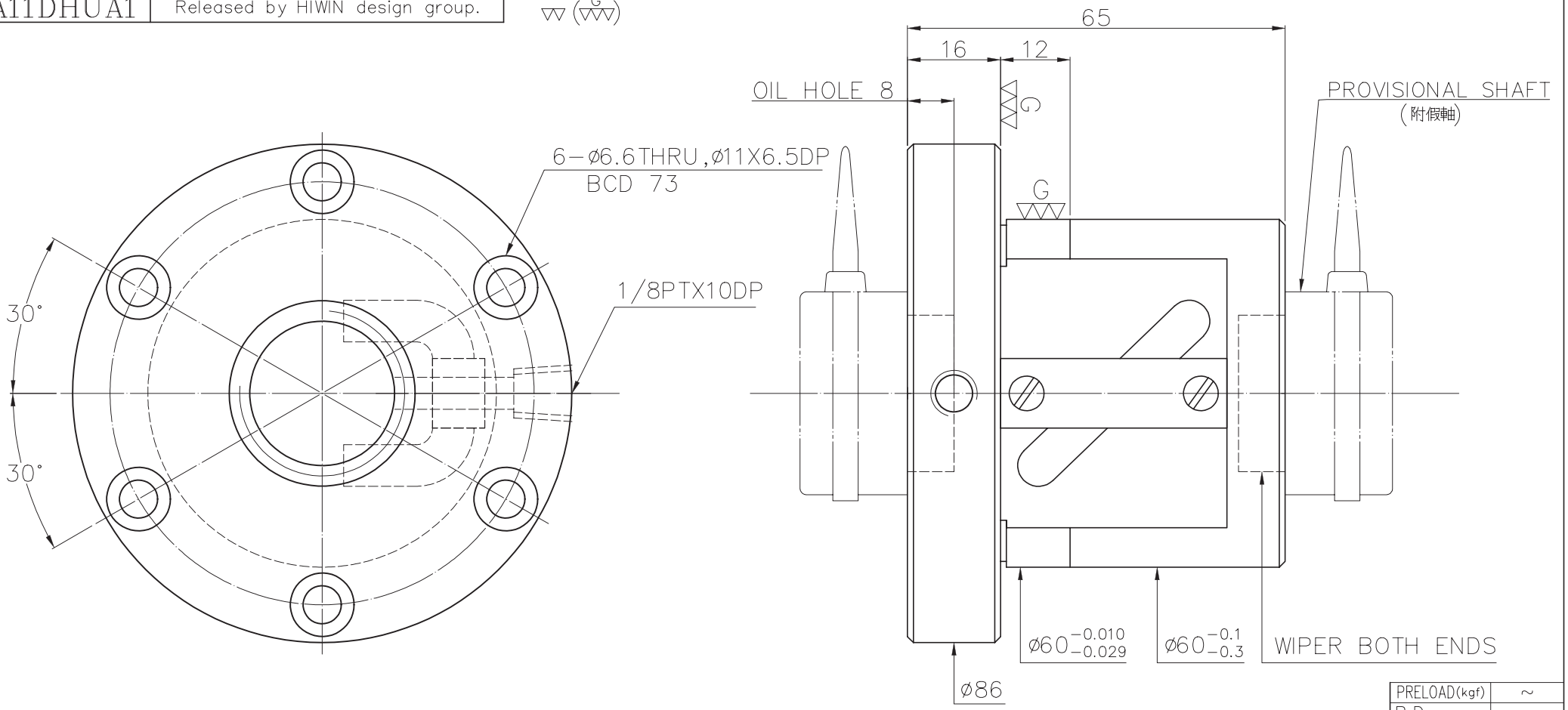

SPEC: R25-10B1-FSW

MAX. AXIAL LOAD (kgf)		LUBRICATION		BALL DIA.	4.763
MAX. ROTATIONAL SPEED (rpm)		SPACE BALL		BACKLASH	0.05MAX
DN VALUE		E1 TYPE ASSEMBLY METHOD		CIRCUIT	2.5*1
MAX. FEED RATE (m/min)		CUSTOMER DRAWING NO.		LEAD ANGLE	6.95
ACCELERATION (m/sec²)		CUSTOMER MC TYPE		DYNAMIC (kgf)	1459
SUPPORT METHOD		CUSTOMER AXIAL TYPE		STATIC (kgf)	2983
				LEAD	10

PRELOAD(kgf)	~
R.D.	~
S.F. (kgf)	
DRAG TORQUE(kgf-cm)	
DIRECTION OF TURN	R
P.C. DIA.	26.1

THREAD LENGTH

V_{300p}: ~

ep: ~

UNCHAMFERED USE ☐R0.5 ■R1 ☐R

ROUGH M/C	FIN M/C	GRD	SCALE
25a	6.3a	0.4a	1:X

NORMAL TOLERANCE mm

UP TO 6	6 30	30 120	120 300	300 600	600 1200	1200 2400	OVER 2400
±0.1	±0.2	±0.3	±0.4	±0.5	±0.8	±1.0	±1.5

HIWIN® BALLSCREWS

MAT.	SH: ROLLED	DATE	2008.11.11
	NT: SNCM220/Equivalent	DWG	WCWU
THREAD BALL TRACK HRC 56 ~ 62		APPD	Michelle
		PROCESS NO.	G
CUSTR	LETROMEC(M)		
DWG.NO.	A11DHUA1		

*BREAK SHARP EDGE UNLESS OTHER SPECIFIED.
*未畫倒角者以R0.5MAX

THREAD END ALLOWS ABOVE LENGTH OUT OF HARDNESS TOLERANCE

DATE	MODIFICATION	APPROVED

* PLEASE IGNORE CHINESE CHARACTERS WHICH ARE FOR OUR REFERENCE ONLY.

A-172

A11DHVA1 | Released by HIWIN design group.

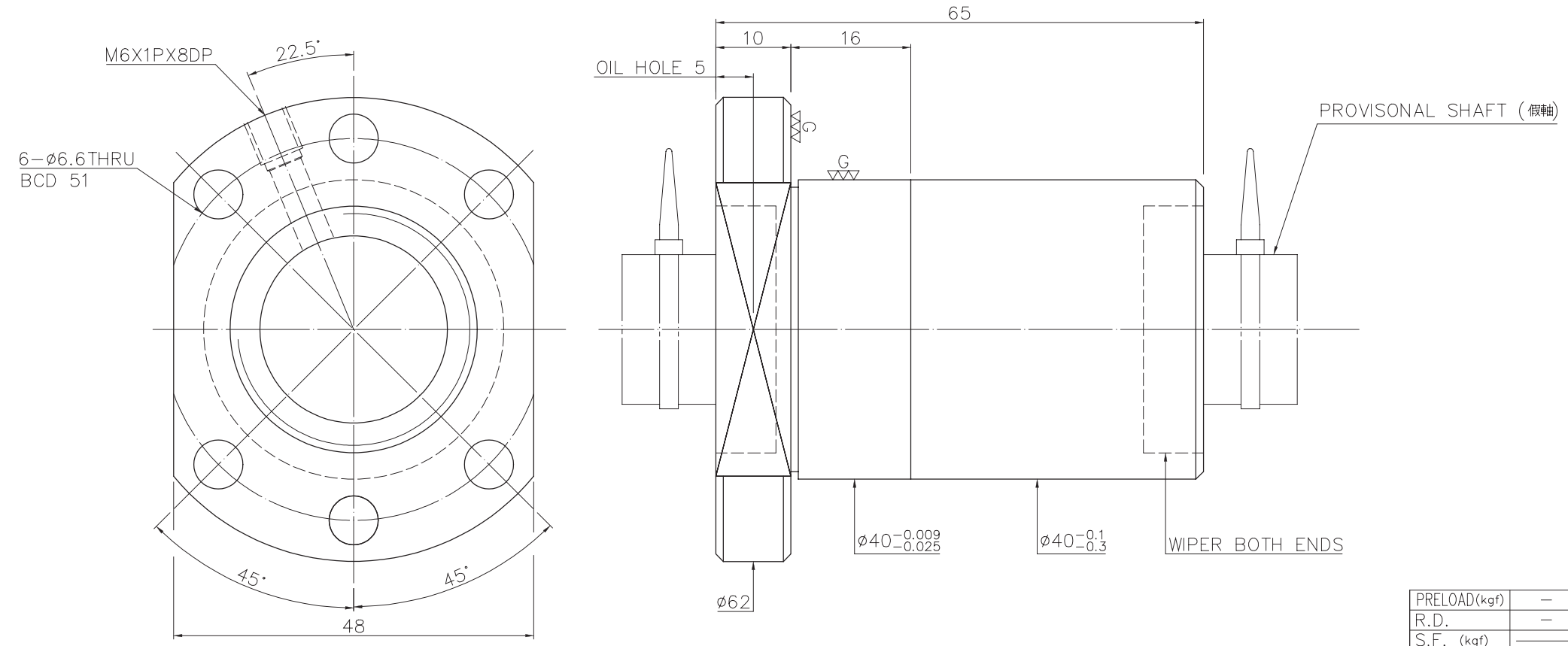

SPEC: R25-10T3-FSI

MAX. AXIAL LOAD (kgf)		LUBRICATION		PRELOAD (kgf)	—
MAX. ROTATIONAL SPEED (rpm)		SPACE BALL		R.D.	—
DN VALUE		E1 TYPE ASSEMBLY METHOD		S.F. (kgf)	———
MAX. FEED RATE (m/min)		CUSTOMER DRAWING NO.		DRAG TORQUE (kgf-cm)	———
ACCELERATION (m/sec²)		CUSTOMER MC TYPE		DIRECTION OF TURN	R
SUPPORT METHOD		CUSTOMER AXIAL TYPE		P.C. DIA.	26.1
				BALL DIA.	4.763
				BACKLASH	0.05MAX
				CIRCUIT	3
				LEAD ANGLE	6.95
				DYNAMIC (kgf)	1430
				STATIC (kgf)	2913
				LEAD	10

THREAD LENGTH

UNCHAMFERED USE ■RO.5 □R1 □R

ROUGH M/C	FIN M/C	GRD	SCALE
25a	6.3a	0.4a	1 : X

NORMAL TOLERANCE mm

UP TO 6	6 30	30 120	120 300	300 600	600 1200	1200 2400	OVER 2400
±0.1	±0.2	±0.3	±0.4	±0.5	±0.8	±1.0	±1.5

MAT.	SH: ROLLED	DATE	2008.11.11
	NT: SNCM220/Equivalent	DWG	WCWU
THREAD BALL TRACK HRC 56 ~ 62		APPD	Michelle
		PROCESS NO.	G
CUSTR	LETROMEC(M)		
DWG.NO.	A11DHVA1		

HIWIN® BALLSCREWS

*BREAK SHARP EDGE UNLESS OTHER SPECIFIED.
*未畫倒角者以R0.5MAX

THREAD END ALLOWS ABOVE LENGTH OUT OF HARDNESS TOLERANCE

V300p: —

ep: ~

DATE	MODIFICATION	APPROVED

* PLEASE IGNORE CHINESE CHARACTERS WHICH ARE FOR OUR REFERENCE ONLY.

A-173

A11E7RA1 | Released by HIWIN design group.

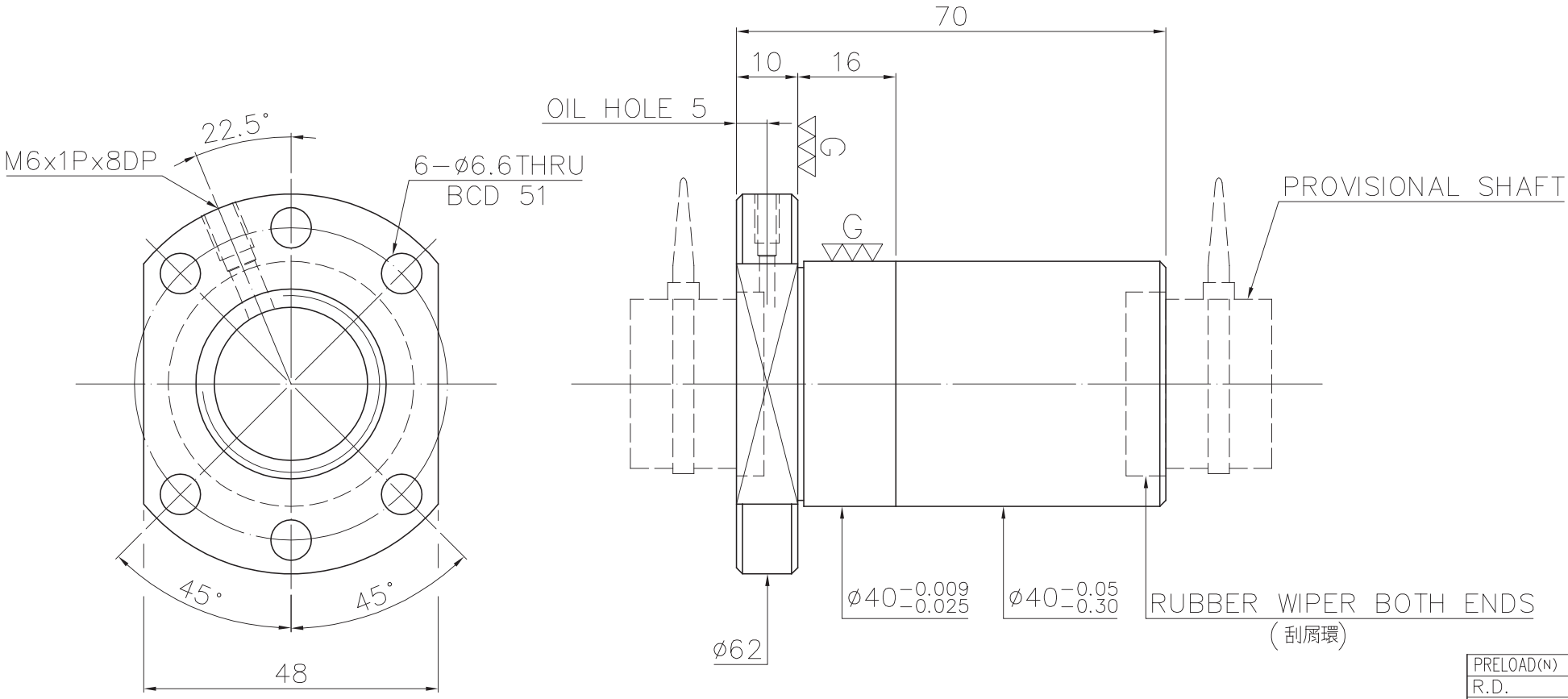

SPEC: 4R25−25K2−FSCNW (1)

MAX. AXIAL LOAD (KN)		LUBRICATION		PRELOAD(N)	~
MAX. ROTATIONAL SPEED (rpm)		SPACE BALL		R.D.	~
DN VALUE		E1 TYPE ASSEMBLY METHOD		S.F. (N)	~
MAX. FEED RATE (m/min)		CUSTOMER DRAWING NO.		DRAG TORQUE(Nm)	~
ACCELERATION (m/sec²)		CUSTOMER MC TYPE		DIRECTION OF TURN	R
SUPPORT METHOD		CUSTOMER AXIAL TYPE		P.C. DIA.	25.37
				BALL DIA.	3.175
				BACKLASH	0.02MAX
				CIRCUIT	2
				LEAD ANGLE	17.41
				DYNAMIC (KN)	7.4
				STATIC (KN)	19.1
				LEAD	25

THREAD LENGTH

UNCHAMFERED USE ☐RO.5 ■R1 ☐R

ROUGH M/C	FIN M/C	GRD	SCALE
25a	6.3a	0.4a	1:X

NORMAL TOLERANCE mm

UP TO 6	6 30	30 120	120 300	300 600	600 1200	1200 2400	OVER 2400
±0.1	±0.2	±0.3	±0.4	±0.5	±0.8	±1.0	±1.5

MAT.	SH: ROLLED	DATE	2008.12.24
	NT: SNCM220/Equivalent	DWG	Akuan
THREAD BALL TRACK HRC 56 ~ 62		APPD	Michelle
		PROCESS NO.	G
CUSTR	HIWIN		
DWG.NO.	A11E7RA1		

HIWIN® BALLSCREWS

*BREAK SHARP EDGE UNLESS OTHER SPECIFIED.
*未畫倒角者以R0.5MAX

THREAD END ALLOWS ABOVE LENGTH OUT OF HARDNESS TOLERANCE

V300p: ~
ep: ~

DATE	MODIFICATION	APPROVED
2012.05.28	MOD. (1)	Michelle

* PLEASE IGNORE CHINESE CHARACTERS WHICH ARE FOR OUR REFERENCE ONLY.

A122HFA1 | Released by HIWIN design group.

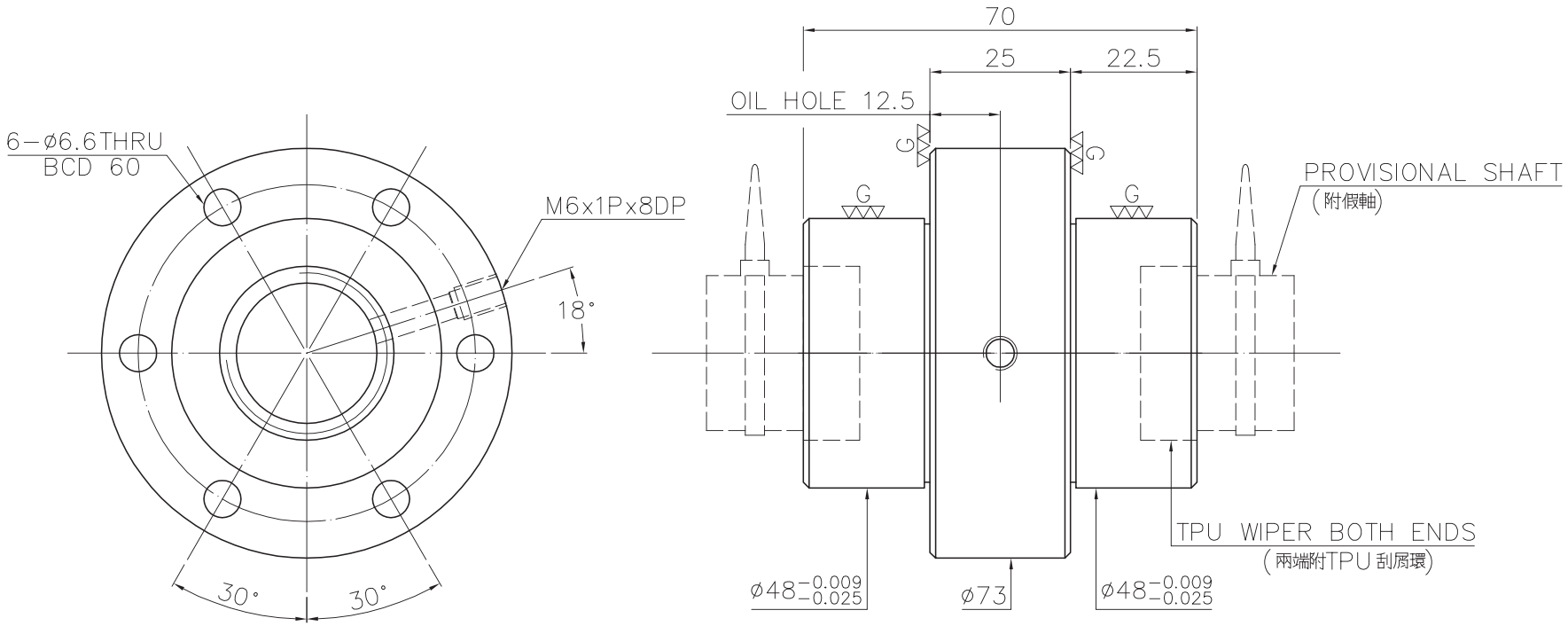

SPEC: 4R25-25K2-FSCEW-E

MAX. AXIAL LOAD (kgf)		LUBRICATION		PRELOAD (kgf)	~
MAX. ROTATIONAL SPEED (rpm)		SPACE BALL		R.D.	~
DN VALUE		E1 TYPE ASSEMBLY METHOD		S.F. (kgf)	~
MAX. FEED RATE (m/min)		CUSTOMER DRAWING NO.		DRAG TORQUE (kgf-cm)	~
ACCELERATION (m/sec²)		CUSTOMER MC TYPE		DIRECTION OF TURN	R
SUPPORT METHOD		CUSTOMER AXIAL TYPE		P.C. DIA.	25.37
				BALL DIA.	3.175
				BACKLASH	0.04MAX
				CIRCUIT	2
				LEAD ANGLE	17.41
			1	DYNAMIC (kgf)	940
				STATIC (kgf)	1950
				LEAD	25

THREAD LENGTH

UNCHAMFERED USE ☐C0.5 ■C1 ☐C

ROUGH M/C	FIN M/C	GRD	SCALE
25a	6.3a	0.4a	1:X

NORMAL TOLERANCE mm

UP TO 6	6 30	30 120	120 300	300 600	600 1200	1200 2400	OVER 2400
±0.1	±0.2	±0.3	±0.4	±0.5	±0.8	±1.0	±1.5

MAT.	SH: ROLLED	DATE	2012.02.01
	NT: SNCM220/Equivalent	DWG	Sting
THREAD BALL TRACK HRC 56 ~ 62		CHK	Michelle
		APPD	Jamin
CUSTR	HIWIN STD.		
DWG.NO.	A122HFA1		

HIWIN® BALLSCREWS

*BREAK SHARP EDGE UNLESS OTHER SPECIFIED.
*未畫倒角者去毛邊 (C0.2MAX)

THREAD END ALLOWS ABOVE LENGTH OUT OF HARDNESS TOLERANCE

V_{300p}: ~
ep: ~

DATE	MODIFICATION	APPROVED
2012.03.09	MOD.1	Cody

* PLEASE IGNORE CHINESE CHARACTERS WHICH ARE FOR OUR REFERENCE ONLY.

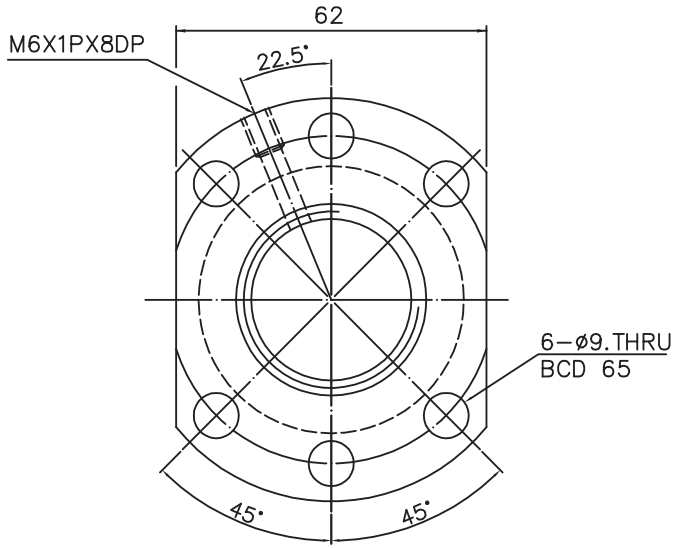

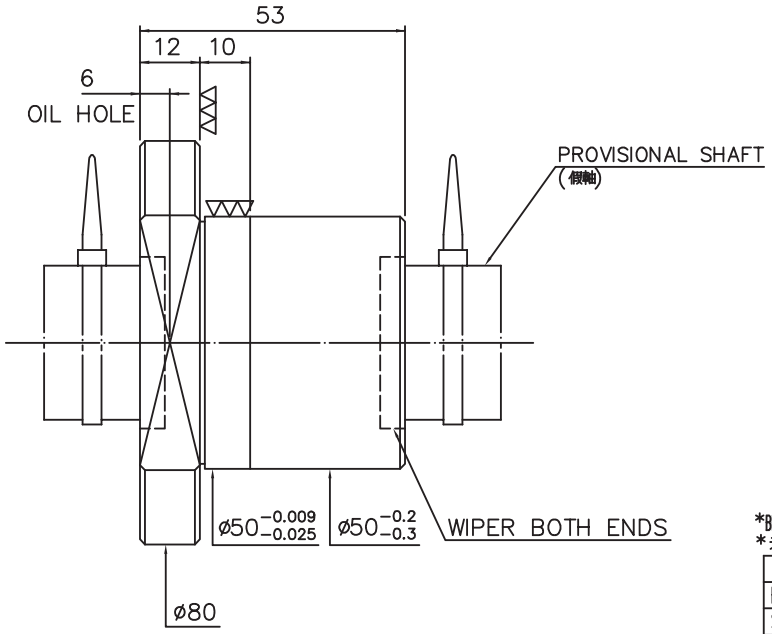

*BREAK SHARP EDGE UNLESS OTHER SPECIFIED
*未畫倒角者去毛邊

PRELOAD(kgf)	———
R.D	———
S.F (kgf)	———
DRAG TORQUE(kgf-cm)	———
LUBRICATION	OIL
DIRECTION OF TURN	RIGHT
PC DIA.	32.4
BALL DIA.	3.175
BALL TRACK FORM	GOTHIC
BACKLASH	0.07MAX
CIRCUIT	4
LEAD ANGLE	2.81°
DYNAMIC (kgf)	———
STATIC (kgf)	———
LEAD	5.

SPEC: R32-5T4-FSI

G

THREAD LENGTH

T: _____ e300: _____

E: _____ e: _____

UNCHAMFERED USE □C0.5 ■C1 □C

ROUGH M/C 25a | FIN M/C 6.3a | GRD 0.4a

SCALE 1: X

UNTOL DIMN mm

UP TO 6	6 30	30 120	120 300	300 600	600 1200	1200 2400	OVER 2400
±0.1	±0.2	±0.3	±0.4	±0.5	±0.8	±1.0	±1.5

THREAD BALL TRACK HRC 58 ~ 62

THREAD END ALLOWS ABOVE LENGTH OUT OF HARDNESS TOLERANCE

CUSTR	HIWIN STD.
TITLE	BALL SCREW
MATAL	NT: SNCM220
DWG.NO.	A10ARBA1

DATE	12.14.'98
DWG	陳俊仁
CHK	
APPD	
PROCESS NO.	G

HIWIN® BALLSCREWS

CUSTOMER DRAWING NO.
MC TYPE
AXIAL TYPE

DATE	MODIFICATION	APPROVED

* PLEASE IGNORE CHINESE CHARACTERS WHICH ARE FOR OUR REFERENCE ONLY.

A10YWCA1 | Released by HIWIN design group.

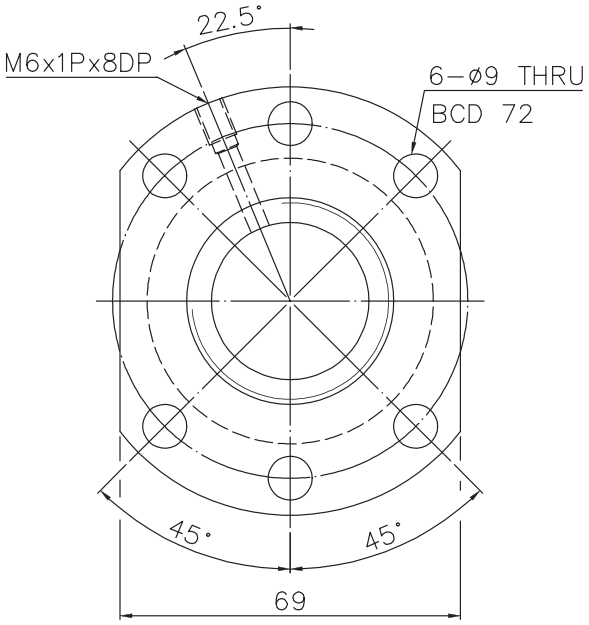

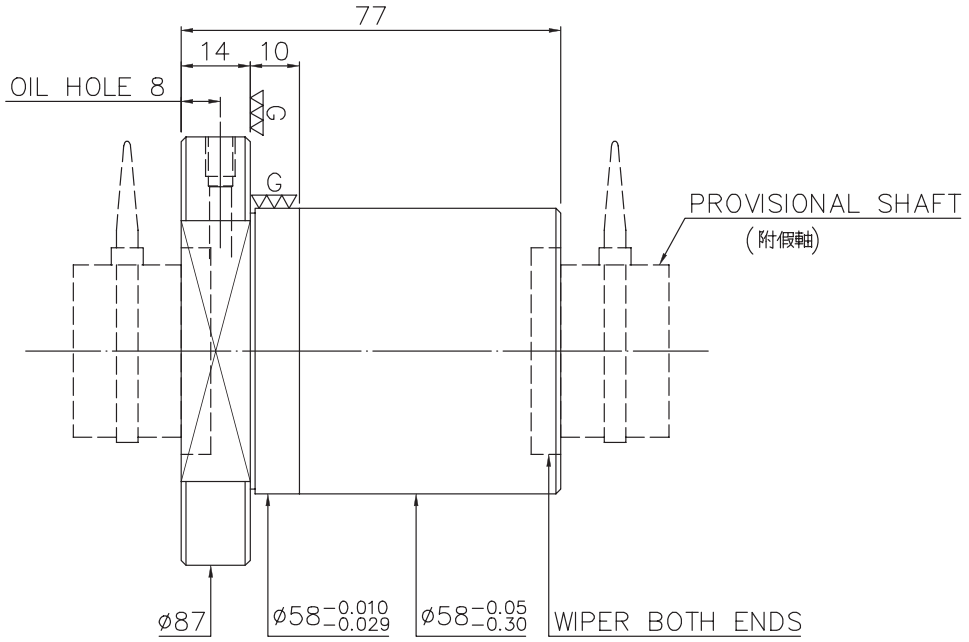

SPEC: R32-10K5-FSC

MAX. AXIAL LOAD (kgf)		LUBRCATION		BALL DIA.	6.35
MAX. ROTATIONAL SPEED (rpm)		SPACE BALL		BACKLASH	~
DN VALUE		E1 TYPE ASSEMBLY METHOD		CIRCUIT	5
MAX. FEED RATE (m/min)		CUSTOMER DRAWING NO.		LEAD ANGLE	5.31
ACCELERATION (m/sec²)		CUSTOMER MC TYPE		DYNAMIC (kgf)	~
SUPPORT METHOD		CUSTOMER AXIAL TYPE		STATIC (kgf)	~
				LEAD	10

PRELOAD (kgf)	~
R.D	~
S.F (kgf)	~
DRAG TORQUE (kgf-cm)	~
DIRECTION OF TURN	R
PC DIA.	34.26

THREAD LENGTH

E300: ~

UNCHAMFERED USE □R0.5 ■R1 □R

ROUGH M/C	FIN M/C	GRD
25a	6.3a	0.4a

SCALE 1:X

UNTOL DIMN mm

UP TO 6	6 30	30 120	120 300	300 600	600 1200	1200 2400	OVER 2400
±0.1	±0.2	±0.3	±0.4	±0.5	±0.8	±1.0	±1.5

MATAL	SH: ROLLED	DATE	2006.04.24
	NT: SNCM220	DWG	張羽沛
THREAD BALL TRACK HRC 56 ~ 62		APPD	吳秋燕
		PROCESS NO.	G
CUSTR	HIWIN		
DWG.NO.	A10YWCA1		

HIWIN® BALLSCREWS

*BREAK SHARP EDGE UNLESS OTHER SPECIFIED.
*未畫倒角者以R0.5MAX

THREAD END ALLOWS ABOVE LENGTH OUT OF HARDNESS TOLERANCE

DATE	MODIFICATION	APPROVED

* PLEASE IGNORE CHINESE CHARACTERS WHICH ARE FOR OUR REFERENCE ONLY.

A10WHIA1 | Released by HIWIN design group.

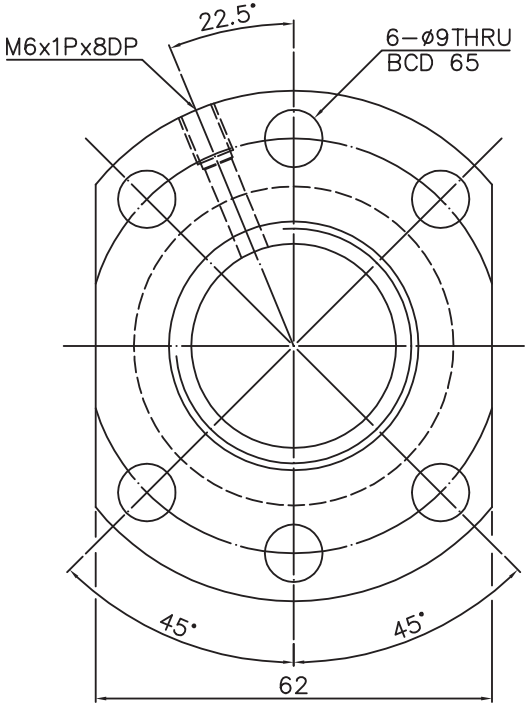

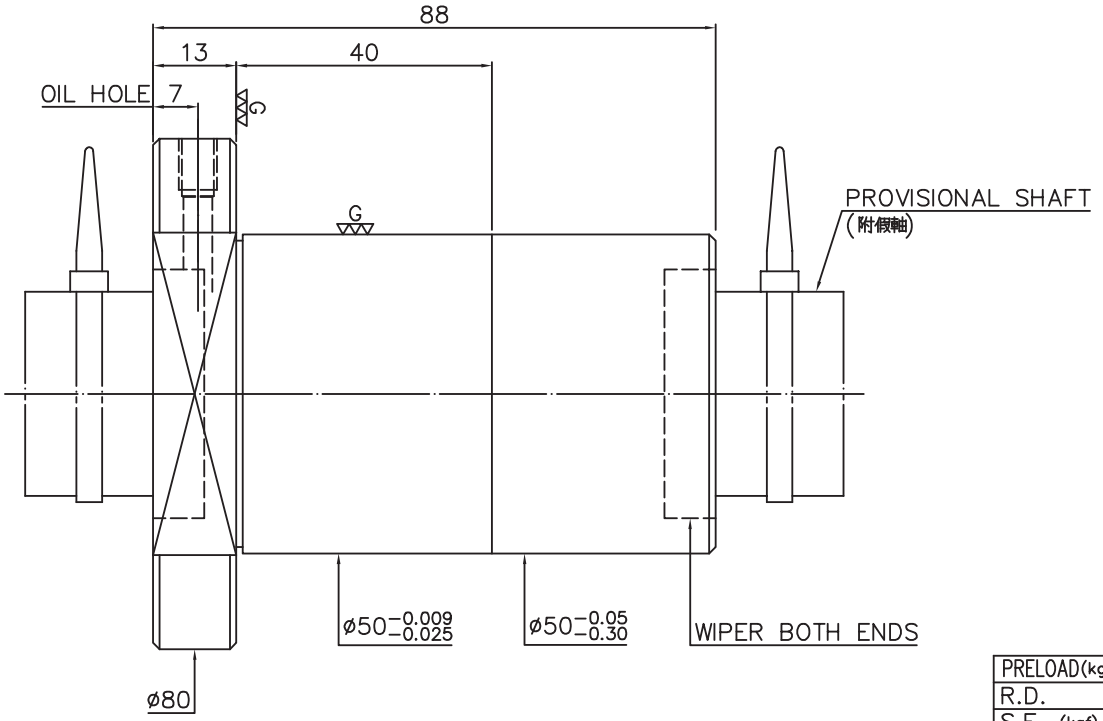

SPEC:4R32-32K2-FSC

MAX. AXIAL LOAD (kgf)		LUBRICATION		BALL DIA.	3.969
MAX. ROTATIONAL SPEED (rpm)		SPACE BALL		BACKLASH ⚠1	0.01MAX
DN VALUE		E1 TYPE ASSEMBLY METHOD		CIRCUIT	2
MAX. FEED RATE (m/min)		CUSTOMER DRAWING NO.		LEAD ANGLE	17.28
ACCELERATION (m/sec²)		CUSTOMER MC TYPE		DYNAMIC ⚠2 (kgf)	1160
SUPPORT METHOD		CUSTOMER AXIAL TYPE		STATIC ⚠3 (kgf)	3178
				LEAD	32

PRELOAD (kgf)	~
R.D.	~
S.F. (kgf)	
DRAG TORQUE (kgf-cm)	
DIRECTION OF TURN	R
P.C. DIA.	32.75

THREAD LENGTH

V_{300p}: ~

ep: ~

UNCHAMFERED USE □R0.5 ■R1 □R

ROUGH M/C	FIN M/C	GRD	SCALE
25a	6.3a	0.4a	1:X

NORMAL TOLERANCE mm

UP TO 6	6 30	30 120	120 300	300 600	600 1200	1200 2400	OVER 2400
±0.1	±0.2	±0.3	±0.4	±0.5	±0.8	±1.0	±1.5

HIWIN® BALLSCREWS

MAT.	SH: ROLLED	DATE	2009.03.16
	NT: SNCM220/Equivalent	DWG	Penny
THREAD BALL TRACK HRC 56 ~ 62		APPD	Michelle
		PROCESS NO.	G
CUSTR	HIWIN STD.		
DWG.NO.	A10WHIA1		

*BREAK SHARP EDGE UNLESS OTHER SPECIFIED.
*未倒角者以R0.5MAX

THREAD END ALLOWS ABOVE LENGTH OUT OF HARDNESS TOLERANCE

DATE	MODIFICATION	APPROVED
2009.03.16	MOD. ⚠1~⚠3	Michelle

* PLEASE IGNORE CHINESE CHARACTERS WHICH ARE FOR OUR REFERENCE ONLY.

A1101WA1 | Released by HIWIN design group.

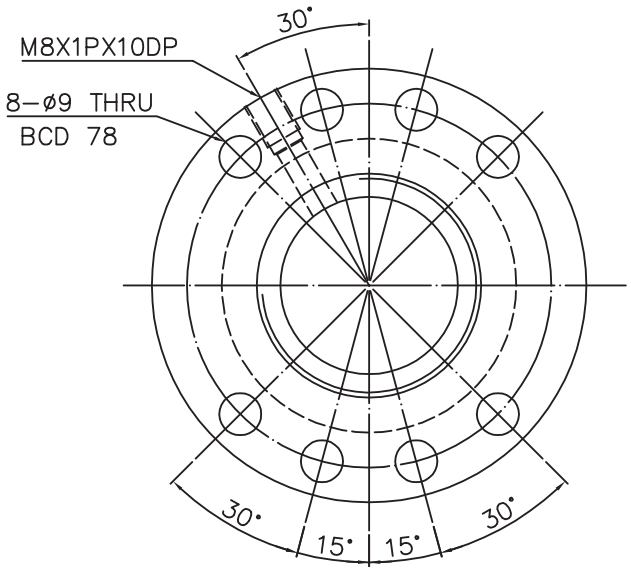

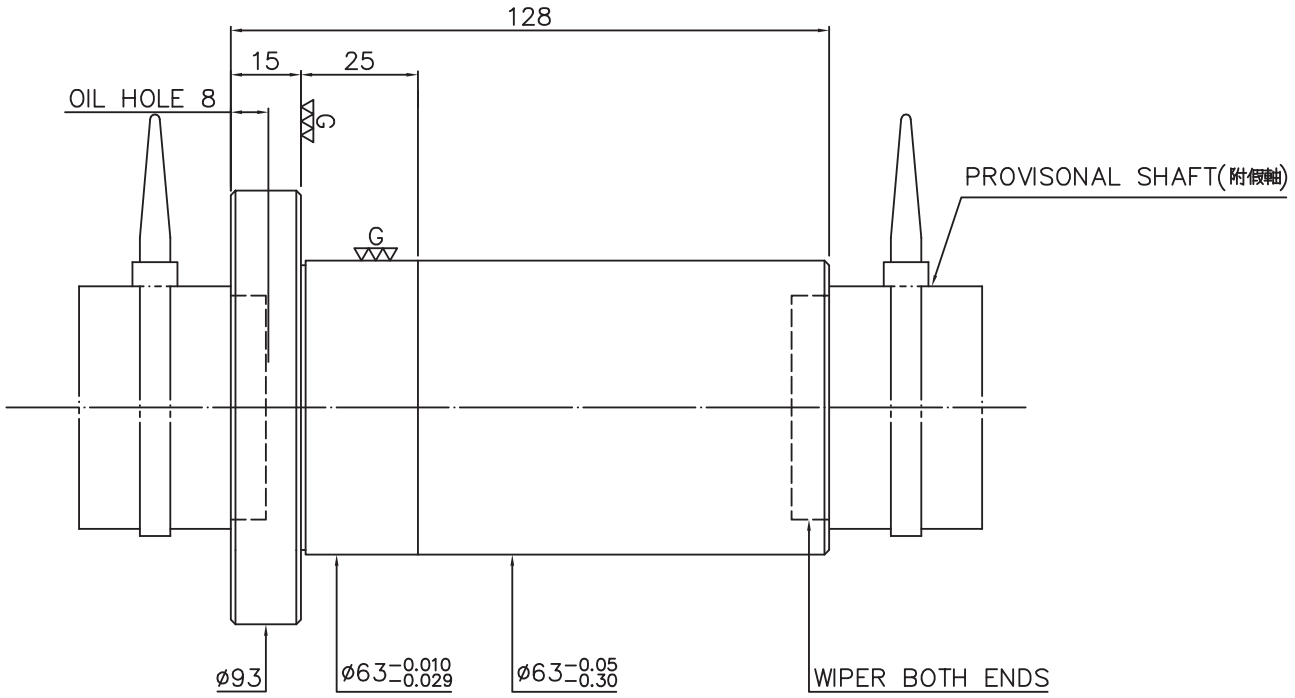

SPEC: 2R38–20K5–FSC

MAX. AXIAL LOAD (kN)		LUBRCATION		PRELOAD(N)	–
MAX. ROTATIONAL SPEED (rpm)		SPACE BALL		R.D	–
DN VALUE		E1 TYPE ASSEMBLY METHOD		S.F (N)	———
MAX. FEED RATE (m/min)		CUSTOMER DRAWING NO.		DRAG TORQUE (Nm)	———
ACCELERATION (m/sec²)		CUSTOMER MC TYPE		DIRECTION OF TURN	R
SUPPORT METHOD		CUSTOMER AXIAL TYPE		PC DIA.	39.31
				BALL DIA.	6.35
				BACKLASH	–
				CIRCUIT	5
				LEAD ANGLE	9.20
				DYNAMIC (kN)	–
				STATIC (kN)	–
				LEAD	20/10

THREAD LENGTH

E300: –

UNCHAMFERED USE □R0.5 ■R1 □R

ROUGH M/C	FIN M/C	GRD
25a	6.3a	0.4a

SCALE 1: X

UNTOL DIMN mm

UP TO 6	6 TO 30	30 TO 120	120 TO 300	300 TO 600	600 TO 1200	1200 TO 2400	OVER 2400
±0.1	±0.2	±0.3	±0.4	±0.5	±0.8	±1.0	±1.5

HIWIN® BALLSCREWS

MATAL	SH: ROLLED	DATE	2006.0720
	NT: SNCM220	DWG	董琬翎
THREAD BALL TRACK HRC 56 ~ 62		APPD	
		PROCESS NO.	G
CUSTR	HIWIN STD.		
DWG.NO.	A1101WA1		

*BREAK SHARP EDGE UNLESS OTHER SPECIFIED.
*未畫倒角者以R0.5MAX

THREAD END ALLOWS ABOVE LENGTH OUT OF HARDNESS TOLERANCE

DATE	MODIFICATION	APPROVED

* PLEASE IGNORE CHINESE CHARACTERS WHICH ARE FOR OUR REFERENCE ONLY.

A114HTA1 | Released by HIWIN design group.

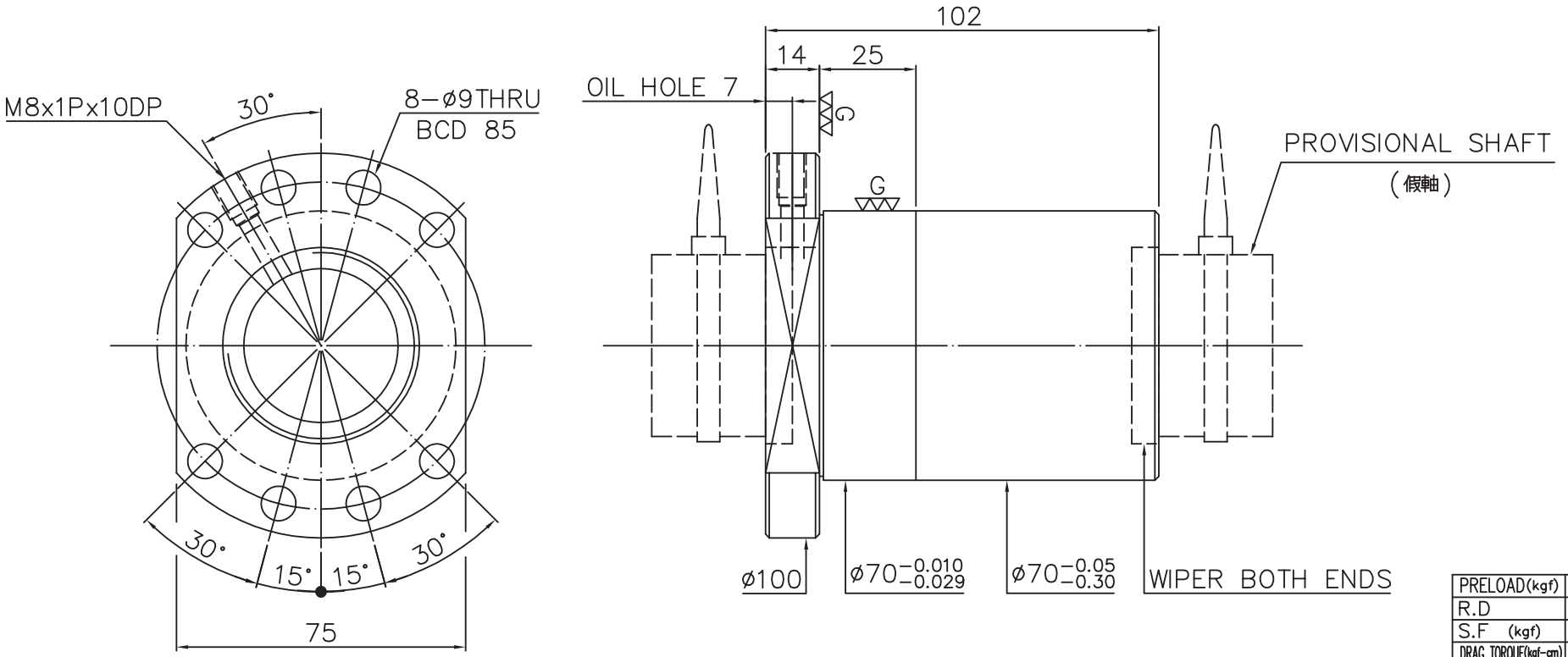

SPEC: 4R40−40K2−FSC

MAX. AXIAL LOAD (kgf)		LUBRCATION		PRELOAD (kgf)	~
MAX. ROTATIONAL SPEED (rpm)		SPACE BALL		R.D	−
DN VALUE		E1 TYPE ASSEMBLY METHOD		S.F (kgf)	~
MAX. FEED RATE (m/min)		CUSTOMER DRAWING NO.		DRAG TORQUE (kgf-cm)	~
ACCELERATION (m/sec²)		CUSTOMER MC TYPE		DIRECTION OF TURN	R
SUPPORT METHOD		CUSTOMER AXIAL TYPE		PC DIA.	41.9
				BALL DIA.	6.35
				BACKLASH	0.15MAX
				CIRCUIT	2
				LEAD ANGLE	16.9
				DYNAMIC (kgf)	−
				STATIC (kgf)	−
				LEAD	40

THREAD LENGTH

E300: −

UNCHAMFERED USE □R0.5 ■R1 □R

ROUGH M/C	FIN M/C	GRD
25a	6.3a	0.4a

SCALE 1: X

UNTOL DIMN mm

UP TO 6	6 30	30 120	120 300	300 600	600 1200	1200 2400	OVER 2400
±0.1	±0.2	±0.3	±0.4	±0.5	±0.8	±1.0	±1.5

MATAL: SH: ROLLED / NT: SNCM220/SCM415

THREAD BALL TRACK HRC 56 ~ 62

DATE: 2007.05.17
DWG: Sting
APPD: LADY
PROCESS NO.: G

CUSTR: HIWIN
DWG.NO.: A114HTA1

HIWIN® BALLSCREWS

*BREAK SHARP EDGE UNLESS OTHER SPECIFIED.
*未倒角者以R0.5MAX

THREAD END ALLOWS ABOVE LENGTH OUT OF HARDNESS TOLERANCE

DATE	MODIFICATION	APPROVED

* PLEASE IGNORE CHINESE CHARACTERS WHICH ARE FOR OUR REFERENCE ONLY.

A-180