LMF-L <Built-in Synthetics Resin Retainer>

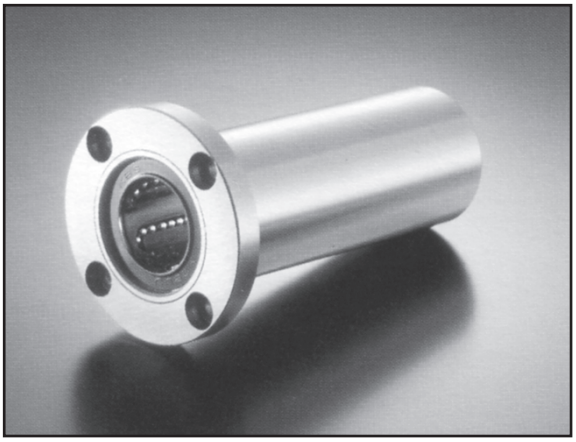

This type is a metric dimension series widely used in Japan and other countries

Nominal Part No.				Major Dimensions and Tolerance (mm)		
Standard Type	Seal Type	Ball Circuit	Weight g	dr Tolerance	D Tolerance	L Tolerance
LMF 6L	**LMF 6L UU**	4	31	6	12 0	35
LMF 8L	**LMF 8L UU**	4	51	8	15 -0.013	45
LMF 10L	**LMF 10L UU**	4	98	10 0 -0.010	19	55
LMF 12L	**LMF 12L UU**	4	110	12	21 0	57
LME 13L	**LME 13L UU**	4	130	13	23 -0.016	61
LME 16L	**LME 16L UU**	5	190	16	28	70 -0.3
LME 20L	**LME 20L UU**	5	260	20	32	80
LME 25L	**LME 25L UU**	6	540	25 0 -0.012	40 0 -0.019	112
LME 30L	**LME 30L UU**	6	680	30	45	123
LME 35L	**LME 35L UU**	6	1,020	35 0	52 0	135
LME 40L	**LME 40L UU**	6	1,570	40 -0.015	60 -0.022	154
LME 50L	**LME 50L UU**	6	3,600	50 0	80 0	192
LME 60L	**LME 60L UU**	6	4,500	60 -0.020	90 -0.025	211

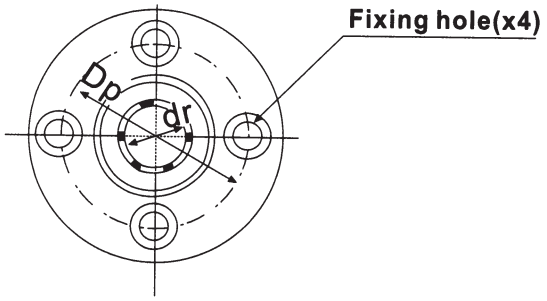

LMF-L

Major Dimensions and Tolerance (mm)						Eccentricity μ m	Squareness μ m	Basic Load Rating		Nominal Part No.
								Dynamic C(N)	Static Co(N)	
Df	t	Dp	X	Y	Z					
28	5	20	3.5	6.5	3.1	15	15	323	530	**LMF 6L**
32	5	24	3.5	6.5	3.1	15	15	431	784	**LMF 8L**
40	6	29	3.5	8	4.1	15	15	588	1,100	**LMF 10L**
42	6	32	4.5	8	4.1	15	15	813	1,570	**LMF 12L**
43	6	33	4.5	8	4.1	15	15	813	1,570	**LME 13L**
48	6	38	4.5	8	4.1	15	15	1,230	2,350	**LME 16L**
54	8	43	5.5	9.5	5.1	20	20	1,400	2,740	**LME 20L**
62	8	51	5.5	9.5	5.1	20	20	1,560	3,140	**LME 25L**
74	10	60	6.6	11	6.1	20	20	2,490	5,490	**LME 30L**
82	10	67	6.6	11	6.1	25	25	2,650	6,270	**LME 35L**
96	13	78	9	14	8.1	25	25	3,430	8,040	**LME 40L**
116	13	98	9	14	8.1	25	25	6,080	15,900	**LME 50L**
134	18	112	11	17.5	11.1	30	30	7,550	20,000	**LME 60L**

SI Unit 1N≒0.102kgf

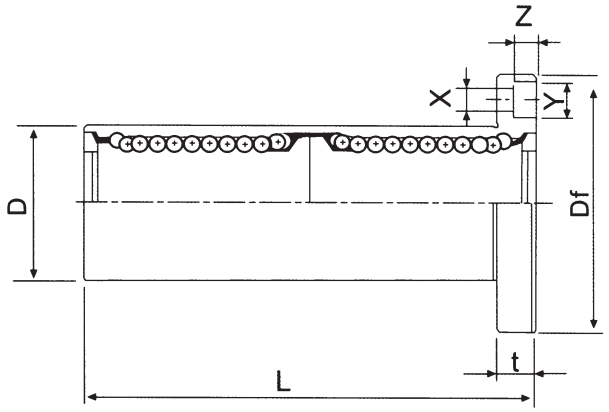

LMK-L <Built-in Synthetics Resin Retainer>

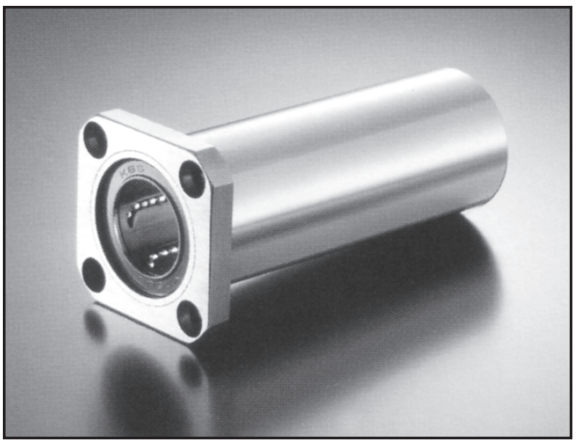

This type is a metric dimension series widely used in Japan and other countries

Nominal Part No.				Major Dimensions and Tolerance (mm)		
Standard Type	Seal Type	Ball Circuit	Weight g	dr Tolerance	D Tolerance	L Tolerance
LMK 6L	**LMK 6L UU**	4	25	6	12 0	35
LMK 8L	**LMK 8L UU**	4	43	8	15 -0.013	45
LMK 10L	**LMK 10L UU**	4	78	10 0 -0.010	19	55
LMK 12L	**LMK 12L UU**	4	90	12	21 0	57
LMK 13L	**LMK 13L UU**	4	108	13	23 -0.016	61
LMK 16L	**LMK 16L UU**	5	165	16	28	70 -0.3
LMK 20L	**LMK 20L UU**	5	225	20	32	80
LMK 25L	**LMK 25L UU**	6	500	25 0 -0.012	40 0 -0.019	112
LMK 30L	**LMK 30L UU**	6	590	30	45	123
LMK 35L	**LMK 35L UU**	6	930	35 0	52 0	135
LMK 40L	**LMK 40L UU**	6	1,380	40 -0.015	60 -0.022	154
LMK 50L	**LMK 50L UU**	6	3,400	50 0	80 0	192
LMK 60L	**LMK 60L UU**	6	4,060	60 -0.020	90 -0.025	211

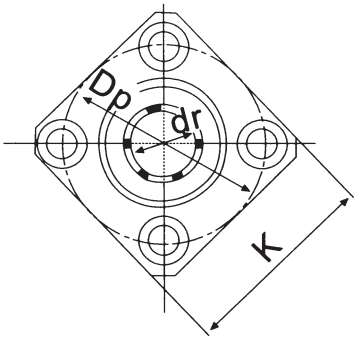

LMK-L

Major Dimensions and Tolerance (mm)							Eccentricity μ m	Squareness μ m	Basic Load Rating		Nominal Part No.
									Dynamic C(N)	Static Co(N)	
Df	K	t	Dp	X	Y	Z					
28	22	5	20	3.5	6.5	3.1	15	15	323	530	**LMK 6L**
32	25	5	24	3.5	6.5	3.1	15	15	431	784	**LMK 8L**
40	30	6	29	3.5	8	4.1	15	15	588	1,100	**LMK 10L**
42	32	6	32	4.5	8	4.1	15	15	813	1,570	**LMK 12L**
43	34	6	33	4.5	8	4.1	15	15	813	1,570	**LMK 13L**
48	37	6	38	4.5	8	4.1	15	15	1,230	2,350	**LMK 16L**
54	42	8	43	5.5	9.5	5.1	20	20	1,400	2,740	**LMK 20L**
62	50	8	51	5.5	9.5	5.1	20	20	1,560	3,140	**LMK 25L**
74	58	10	60	6.6	11	6.1	20	20	2,490	5,490	**LMK 30L**
82	64	10	67	6.6	11	6.1	25	25	2,650	6,270	**LMK 35L**
96	75	13	78	9	14	8.1	25	25	3,430	8,040	**LMK 40L**
116	92	13	98	9	14	8.1	25	25	6,080	15,900	**LMK 50L**
134	106	18	112	11	17.5	11.1	30	30	7,550	20,000	**LMK 60L**

SI Unit 1N≒0.102kgf

