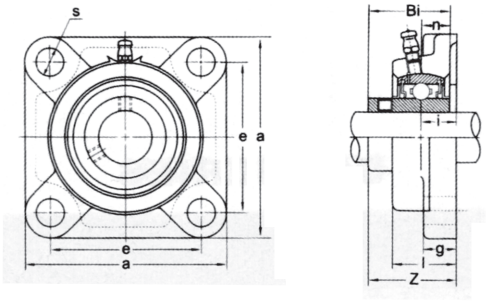

UCF SERIES

Bearing No.	d mm	in	a	e	i	l	z	s	Bi	n	g
UCF203	17.0000	-	86	64	15	25.5	33.3	12	31	12.7	12
UCF203-11	17.4625	11/16	86	64	15	25.5	33.3	12	31	12.7	12
UCF204-12	19.0500	3/4	86	64	15	25.5	33.3	12	31	12.7	12
UCF204	20.0000	-	86	64	15	25.5	33.3	12	31	12.7	12
UCF205-14	22.2250	7/8	95	70	16	27.0	35.7	12	34	14.3	14
UCF205-15	23.8125	15/16	95	70	16	27.0	35.7	12	34	14.3	14
UCF205	25.0000	-	95	70	16	27.0	35.7	12	34	14.3	14
UCF205-16	25.4000	1	95	70	16	27.0	35.7	12	34	14.3	14
UCF206-17	26.9875	1-1/16	108	83	18	31.0	40.2	12	38.1	15.9	14
UCF206-18	20.5750	1-1/18	108	83	18	31.0	40.2	12	38.1	15.9	14
UCF206	30.0000	-	108	83	18	31.0	40.2	12	38.1	15.9	14
UCF206-19	30.1625	1-3/16	108	83	18	31.0	40.2	12	38.1	15.9	14
UCF206-20	31.7500	1-1/4	108	83	18	31.0	40.2	12	38.1	15.9	14
UCF207-20	31.7500	1-1/4	117	92	19	34.0	44.4	14	42.9	17.5	16
UCF207-21	33.3375	1-5/16	117	92	19	34.0	44.4	14	42.9	17.5	16
UCF207-22	34.9250	1-3/8	117	92	19	34.0	44.4	14	42.9	17.5	16
UCF207	35.0000	-	117	92	19	34.0	44.4	14	42.9	17.5	16
UCF207-23	36.5125	1-7/16	117	92	19	34.0	44.4	14	42.9	17.5	16
UCF208-24	38.1000	1-1/12	130	102	21	36.0	51.2	16	49.2	19.0	16
UCF208-25	39.6875	1-9/16	130	102	21	36.0	51.2	16	49.2	19.0	16
UCF208	40.0000	-	130	102	21	36.0	51.2	16	49.2	19.0	16
UCF209-26	41.2750	1-5/8	137	105	22	38.0	52.2	16	49.2	19.0	18
UCF209-27	42.8625	1-11/16	137	105	22	38.0	52.2	16	49.2	19.0	18
UCF209-28	44.4500	1-3/4	137	105	22	38.0	52.2	16	49.2	19.0	18
UCF209	45.0000	-	137	105	22	38.0	52.2	16	49.2	19.0	18
UCF210-30	47.6250	1-7/8	143	111	22	40.0	54.6	16	51.6	19.0	18
UCF210-31	49.2125	1-15/16	143	111	22	40.0	54.6	16	51.6	19.0	18
UCF210	50.0000	-	143	111	22	40.0	54.6	16	51.6	19.0	18
UCF210-32	50.8000	2	143	111	22	40.0	54.6	16	51.6	19.0	18
UCF211-32	50.8000	2	162	130	25	43.0	58.4	19	55.6	22.2	20
UCF211-34	53.9750	2-1/8	162	130	25	43.0	58.4	19	55.6	22.2	20
UCF211	55.0000	-	162	130	25	43.0	58.4	19	55.6	22.2	20
UCF211-35	55.5625	2-3/16	162	130	25	43.0	58.4	18	55.6	22.2	20

UCF SERIES

Bearing No.	d mm	in	a	e	i	l	z	s	Bi	n	g
UCF212-36	57.1500	2-1/4	175	143	29	48	68.7	19	65.1	25.4	20
UCF212-37	58.7375	2-5/16	175	143	29	48	68.7	19	65.1	25.4	20
UCF212	60.0000	-	175	143	29	48	68.7	19	65.1	25.4	20
UCF212-38	60.3250	2-3/8	175	143	29	48	68.7	19	65.1	25.4	20
UCF212-39	61.9125	2-2/16	175	143	29	48	68.7	19	65.1	25.4	20
UCF213-40	63.5000	2-1/2	187	149	30	50	69.7	19	65.1	25.4	20
UCF213	65.0000	-	187	149	30	50	69.7	19	65.1	25.4	20
UCF213-43	68.2625	2-11/16	187	149	30	50	69.7	19	65.1	25.4	20
UCF214-44	69.8500	2-3/4	193	152	31	54	75.4	19	74.6	30.2	24
UCF214	70.0000	-	193	120	31	54	75.4	19	74.6	30.2	24
UCF215-44	69.8500	2-3/4	200	159	34	56	78.5	19	77.8	33.3	24
UCF215-47	74.6125	2-15/16	200	159	34	56	78.5	19	77.8	33.3	24
UCF215	75.0000	-	200	159	34	56	78.5	19	77.8	33.3	24
UCF215-48	76.2000	3	200	159	34	56	78.5	19	77.8	33.3	24
UCF216-50	79.3750	3-1/8	208	165	34	58	83.3	23	82.6	33.3	24
UCF216	80.0000	-	208	165	34	58	83.3	23	82.6	33.3	24
UCF216-52	82.5500	3-1/4	208	165	34	58	83.3	23	82.6	33.3	24
UCF217-52	82.5500	3-1/4	220	175	36	63	87.6	23	85.7	34.1	26
UCF217	85.0000	-	220	175	36	63	87.6	23	85.7	34.1	26
UCF218-56	88.9000	3-1/2	235	187	40	68	96.3	23	96	39.7	26
UCF218	90.0000	-	235	187	40	68	96.3	23	96	39.7	26
UCF305-14	22.2250	7/8	110	80	16	29	39	16	38	15	13
UCF305-15	23.8125	15/16	110	80	16	29	39	16	38	15	13
UCF305	25.0000	-	110	80	16	29	39	16	38	15	13
UCF305-16	25.4000	1	110	80	16	29	39	16	38	15	13
UCF306-18	28.5750	1-1/8	125	95	18	32	44	19	43	17	15
UCF306	30.0000	-	125	95	18	32	44	19	43	17	15
UCF306-19	30.1625	1-3/16	125	95	18	32	44	19	43	17	15
UCF307-20	31.7500	1-1/4	135	100	20	36	49	19	48	19	16
UCF307-21	33.3375	1-5/16	135	100	20	36	49	19	48	19	16
UCF307-22	34.9250	1-3/8	135	100	20	36	49	19	48	19	16
UCF307	35.0000	-	135	100	20	36	49	19	48	19	16
UCF307-23	36.5125	1-7/16	135	100	20	36	49	19	48	19	16
UCF308-24	38.1000	1-1/2	150	112	23	40	56	19	52	19	17
UCF308-25	39.6875	1-9/16	150	112	23	40	56	19	52	19	17
UCF308	40.0000	-	150	112	23	40	56	19	57	19	17
UCF309-24	41.2750	1-5/8	160	125	25	44	60	19	57	22	18
UCF309-27	42.8625	1-11/16	160	125	25	44	60	19	57	22	18
UCF309-28	44.4500	1-3/4	160	125	25	44	60	19	57	22	18
UCF309	45.0000	-	160	125	25	44	60	19	57	22	18

UCF SERIES

Bearing No.	d mm	in	a	e	i	l	z	s	Bi	n	g
UCF310-30	47.6250	1-7/8	175	132	28	48	67	23	61	22	19
UCF310-31	69.2125	1-15/16	175	132	28	48	67	23	61	22	19
UCF310	50.000	-	175	132	28	48	67	23	61	22	19
UCF311-32	50.8000	2	185	140	30	52	71	23	66	25	20
UCF311-34	53.9750	2-1/8	185	140	30	52	71	23	66	25	20
UCF311	55.0000	-	185	140	30	52	71	23	66	25	20
UCF311-35	55.5625	2-3/16	185	140	30	52	71	23	66	25	20
UCF312-36	57.1500	2-1/4	195	150	33	56	78	23	71	26	22
UCF312	60.0000	-	195	150	33	56	78	23	71	26	22
UCF312-38	60.3250	2-3/8	195	150	33	56	78	23	71	26	22
UCF312-39	61.9125	2-2/16	195	150	33	56	78	23	71	26	22
UCF313-10	63.5000	2-1/2	208	166	33	58	78	25	75	30	22
UCF313	65.0000	-	208	166	33	58	78	25	75	30	22
UCF314-44	69.8500	2-3/4	226	178	36	61	81	25	78	33	25
UCF314	70.0000	-	226	178	36	61	81	25	78	33	25
UCF315	76.2000	-	236	184	39	66	89	25	82	32	25
UCF315-48	76.2000	3	236	184	39	66	89	25	82	32	25
UCF316-50	79.3750	3-1/8	256	196	39	68	91	31	86	34	27
UCF316	80.0000	-	256	196	39	68	91	31	86	34	27
UCF317-52	82.5500	3-1/4	260	204	44	74	100	31	96	40	27
UCF317	85.0000	-	260	204	44	74	100	31	96	40	27
UCF318-56	88.9000	3-1/2	280	216	44	76	100	35	96	40	30
UCF318	90.0000	-	280	216	44	76	100	35	96	40	30